Exhibit A

ATLANTIC BOULEVARD / I-710 CORRIDOR

ADVANCED TRAFFIC MANAGEMENT SYSTEM IMPROVEMENT PROJECT

Statement of Work

Final

Prepared for:
Los Angeles County
Department of Public Works

Prepared by:
Siemens ITS

(Date)

TABLE OF CONTENTS

Page #

PROJECT SCOPE 1

Project Phases 1

Project Area 1

Project Components 1

Project Overview 3

FUNCTIONAL SYSTEM ELEMENTS 4

Functional Element 1 – Advanced Transportation Management System (ATMS) 4
ATMS Overview 4
Desired ATMS Functionality/Requirements 4
Local ATMS Configueration 5
Traffic Control System (TCS) 8
Vehicle Detection System (VDS) 8
Closed Circuit Television (CCTV) Surveillance 9
Gateway Cities Traffic Signal Forum Sub-Regional TMC 9
Coordination with Other Regional Systems/Projects 9

Functional Element 2 – Agency Monitoring/Control Workstation Site 10

Functional Element 3 – System Integration 11
Local 11
Regional 11

Functional Element 4 – Communications System 12
Communications Overview 12
Scope of Communications System Coverage 13
Communications Media Options 13
Communications Approach 13

SPECIAL PROJECT PROVISIONS 15

Open Systems Architecture 15

Coordination with Other Projects/Systems 15

Project Scope 15

Project Deliverables 15

PHASE 1 CONCEPTUAL DESIGN MASTER PLAN DRAFT SCOPE OF SERVICES 16

Task 1: Project Management 16
Task 1.1: Project Coordination 16
Task 1.2: Attend Project Meetings/Make Project Presentations 17
Task 1.3: Create Project Web Page 18
Task 1.4: Prepare Project Reports 19

Task 2: Preliminary/Conceptual Design 19
Task 2.1: Identify Stakeholder Objectives 19

Task 2.2: Concept-of-Operations 20
Task 2.3: Requirements Analysis 22
Task 2.3.1: ATMS and Communications User and System Requirements 22
ATMS Functional Requirements 23
Communications User and Functional Requirements 23
Task 2.3.2: Integration System User and System Requirements 24
Integration System Functional Requirements 25
Task 2.4: System Architecture 25
ATMS 26
Communications 26
Local City Control Site 26
Integrated Systems 26
Task 2.5: Alternative Analysis and Recommendations 26
Task 2.5.1: ATMS Analysis and Recommendations 26
Task 2.5.2: Communications Alternative Analysis and Recommendations 28
Task 2.5.3: Local Control Center Alternative Analysis 30
Task 2.6: Conceptual Design Report 31
ATMS 31
Communications 31
Local City Control Site 32
Integrated Systems 32
Task 2.7: Operations, Management and Maintenance Plan 33
Task 2.8: Conceptual Design Workshop 34
Task 2.9: City Concurrence *(as needed task)* 34
Task 2.10: Final Conceptual Design Report 34
Task 2.11: Early Deployment 35

PROJECT SCOPE

Project Phases

This document defines the Scope of Services for the Atlantic Boulevard / I-710 Corridor Advanced Traffic Management System Improvement Project (Project). Capitalized terms used in this Exhibit A (Statement of Work) without definition shall have the meanings given to such terms in the body of the Consultant Services Agreement between Consultant and County (the "Agreement"). Work described in this work statement will be completed and delivered by Consultant to County in accordance with the terms of the Agreement. The following is an outline of the major tasks of the Project.

Task 1: Project Management
Task 2: Preliminary / Concept Design
Task 3: Detailed Design
Task 4: System Deployment and Integration
Task 5: Construction Inspection Assistance
Task 6: System Acceptance and Operational Testing
Task 7: Documentation and As-Built Plans
Task 8: Training
Task 9: Start-Up and On-Going System Maintenance

The implementation of this Project will be accomplished in phases. Phase I will consist of Preliminary /Conceptual Design, Early Deployment/Implementation tasks (to be determined), and the Project Management responsibilities associated with this phase. Although Consultant selection will be based on qualifications for completing all tasks described, the subsequent contract will be for Phase I only. Public Works has the option of entering into supplemental agreement(s) with the selected Consultant for the remaining phases of the Project.

Project Area

The Project area (See Figure 1: Project Area) consists of the following thirteen local agencies in addition to Caltrans and the County:

- Bell
- Commerce
- Cudahy
- Long Beach
- Maywood
- Signal Hill
- Vernon
- Bell Gardens
- Compton
- Huntington Park
- Lynwood
- Paramount
- South Gate

Project Components

The primary Project component includes the development of an Advanced Transportation Management System (ATMS) specifically designed to meet the needs and requirements of the Gateway Cities Traffic Signal Forum. There are four (4) major functional system elements of this Project:

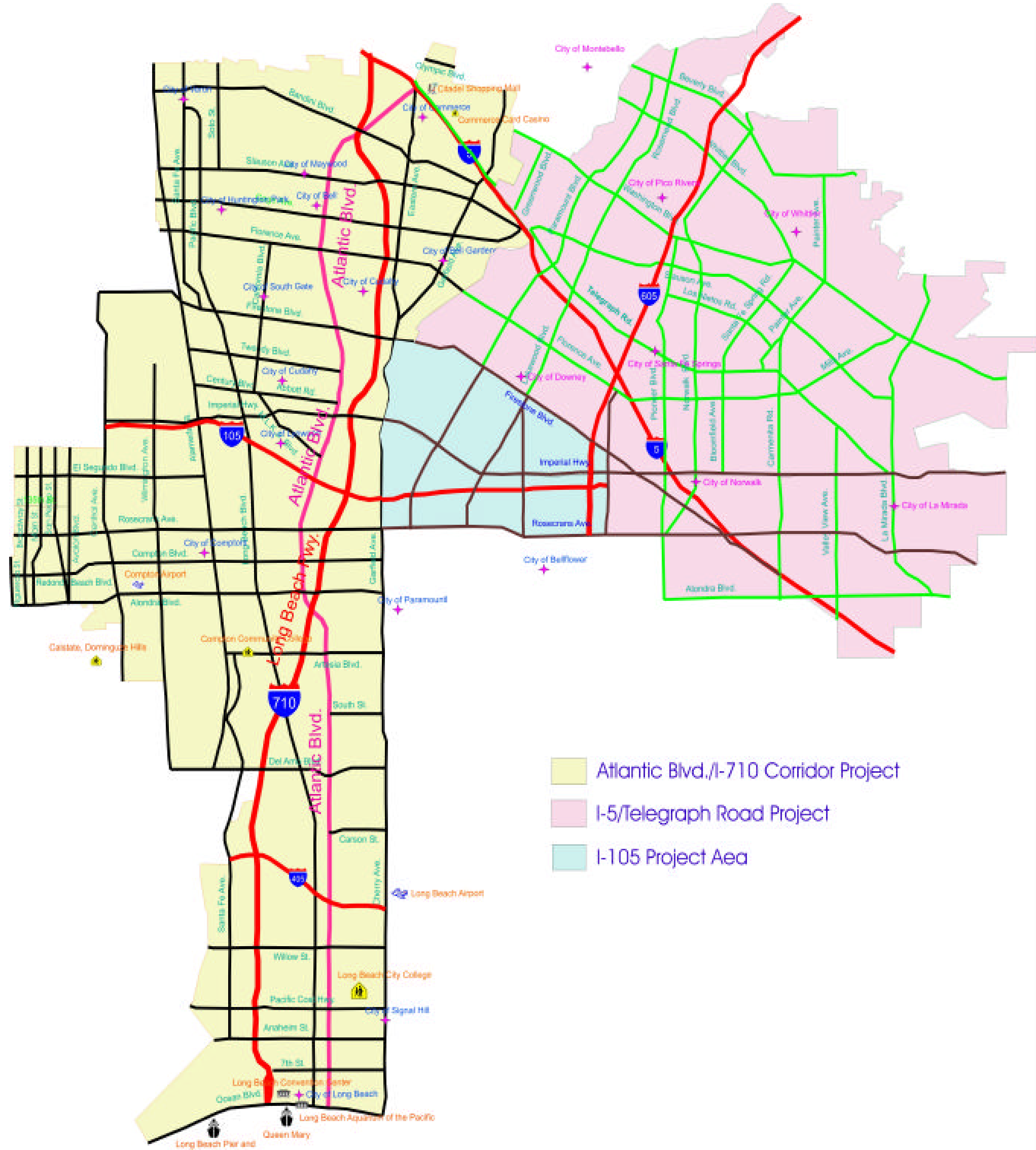

Figure 1: Project Area

- Advanced Transportation Management System (ATMS)
  - Desired ATMS Functionality/Requirements
  - Traffic Control System (TCS)
  - Vehicle Detection System
  - Closed Circuit Television (CCTV) Surveillance
  - Coordination with other Regional Systems/Projects
- Local Control Centers (LCC) at each jurisdiction
- System Integration with Information Exchange Network (IEN)
- Communications System
  - Field to local traffic control system
  - Local traffic control system to sub-regional TMC and to regional TMC

Pursuant to this Agreement, the Consultant shall complete Phase 1 for each of these four (4) functional system elements.

A major element of the system integration will be to integrate the Local Control Centers (LCC) and any new TCSs installed as part of this project with the County's Information Exchange Network (IEN). The IEN is a management tool that provides an interface to multiple TCSs and allows for information from these systems to be displayed on a common interface. The IEN allows for agencies to view traffic signal information from adjacent agencies to assist in traffic management decisions. Other elements of the IEN include tools for tracking incidents in the region and implementing response scenarios to adjust traffic signal timing at intersections that may be impacted by incidents on the freeway and surface street network.

Project Overview

In summary, the Preliminary/Conceptual Design Phase will include infrastructure requirements and conceptual design of the following elements:

- Targeted ATMS design/development along the Atlantic Boulevard / I-710 Corridor to allow monitoring, controlling, and coordinating of traffic signal operations and Intelligent Transportation System (ITS) field devices between their respective field controllers and each affected agency, two-way communications, and real-time database management
- Monitoring/control workstations located in the existing facilities of each municipality located in the Project area
- Data and possible video link to the State of California Department of Transportation's (Caltrans) District 7 and 12 Transportation Management Centers (TMC)
- An interface and link with the proposed Los Angeles County Regional TMC and other proposed sub-regional TMCs to be located in the other Los Angeles County Traffic Forum areas
- A "tailored" version of the Countywide Information Exchange Network (IEN) to serve as the primary system integration element
- Communications system capable of supporting the recommended Project elements (per this scope-of-services)

FUNCTIONAL SYSTEM ELEMENTS

Functional Element 1 – Advanced Transportation Management System (ATMS)

ATMS Overview

This element consists of the development, design, selection, and implementation of a complete inter-jurisdictional ATMS. The ATMS will include the hardware and software necessary to allow monitoring, controlling, and coordinating of traffic signal operations and ITS field devices to be installed along the Project area. It will also allow for future expansion to monitor, control, and coordinate other ITS field devices. The ATMS will be operated and/or monitored from individual agency workstations with traffic surveillance capabilities to detect and monitor signal status, traffic congestion and incidents, and display this information through a fully-integrated mapping function. The ATMS will also be able to detect equipment malfunctions, allowing the operator to initiate appropriate maintenance, operations, and/or other responses to traffic events and congestion either manually or automatically using an expert system application.

The ATMS is intended to build upon the benefits achieved by the existing time based signal synchronization projects previously implemented by the County. When installed, the ATMS will allow for two-way communications, real-time database management, and control and monitoring functions between the traffic signal controllers and each affected agency.

The ATMS is intended to allow the Agencies to control traffic signal operations from a remote location and monitor traffic signal operations for malfunctions. The operational and functional monitoring of traffic signals will enable Agencies to be provided with immediate notification of signal malfunctions resulting in faster and more efficient maintenance responses. The monitoring and control function will also provide an inter-jurisdictional data-sharing component to allow the implementation of arterial traffic management strategies. These strategies will be utilized to reduce incident response time during recurring and nonrecurring incidents, emergencies, malfunctions, and routine maintenance calls. The data-sharing component shall also include monitoring and control access protocols among the Agencies.

Desired ATMS Functionality/Requirements

The development of the ATMS requires a traffic management system operations plan that identifies existing and desired levels of operations, and then recommends the most suitable ATMS to meet those needs. Therefore, the Consultant will be required to design, select, and implement a commercial-off-the-shelf (COTS) or other previously developed TCS software capable of meeting this Project's needs and requirements as well as interfacing with the Countywide IEN.

The Consultant shall design/develop the ATMS (and its associated TCS) targeted at the following functionality/requirements baseline at a minimum:

- Be operated and/or monitored from the sub-regional TMC (located at the planned Los Angeles County Regional TMC) and individual agency workstation(s) proposed for each municipality

- Have traffic surveillance capability through detection and monitoring of signal status and traffic congestion and incidents, and display of this information through a fully-integrated mapping function
- Once-per-second monitoring and real-time control and synchronization of every signalized intersection along the Project area via their existing/selected TCS
- Collect real-time traffic data and information and make it available at the corridor level
- Provide real-time incident detection/response capabilities
- Immediate notification of equipment malfunctions in order to provide faster and more efficient maintenance responses
- Provide local and regional level access, controls, and connections to other future sub-regional Traffic Forum TMCs, Caltrans District 7 and 12 TMCs, and the planned Los Angeles County Regional TMC
- Provide each municipality with a workstation capable of controlling its jurisdiction's traffic signals, as well as the ability to monitor all signals within the Region
- Allow an individual agency inter-jurisdictional communications, traffic data and/or analysis sharing, and localized control of adjacent jurisdictions' signals through cooperative efforts, pre-approved arrangements, and coordinated responses in the event of congestion, arterial incidents, special events, major incidents, and/or during non-peak hours and weekends
- Provide levels of security to restrict access to unauthorized users

The area covered by this Project includes agencies that are included in other County Traffic Forums. Through these other projects previous analyses have been undertaken and in some cases systems have been deployed. The work performed under this contract will seek to not repeat the previous analyses, but rather to expand upon and further the work performed through these other projects.

Local ATMS Configueration

The Atlantic Blvd./ I-710 Corridor Project area consists of thirteen local agencies in addition to Caltrans and the County. Table 1 provides a list of agencies and information regarding their Forum affiliation and existing and planned Traffic Control Systems (TCS).

- The County is in the process of acquiring a traffic control system. All signals in the unincorporated area of the County will be connected to this traffic control system.
- Caltrans utilizes its own traffic control system – CTNET. The Caltrans signals will be connected to this system located at District 7 headquarters in Los Angeles.
- The Cities of South Gate and Long Beach have existing traffic control systems, which have recently been upgraded. The traffic control system at the City of Commerce will be upgraded as part of the I-5/Telegraph Road Corridor Project. The Cities of Compton, Lynwood, and Paramount will be equipped with traffic control systems as part of the I-105 Corridor Project.
- The City of Vernon has recently deployed an ARIES traffic control system, in their City. This is a closed loop system which will need to be upgraded to provide connectivity to the IEN and satisfy the operational requirements for multi- and cross-jurisdictional operations.

As a result, the Atlantic Blvd. / I-710 project needs to concentrate on deploying traffic control systems in the following jurisdictions:

- Bell
- Bell Gardens
- Cudahy
- Huntington Park
- Maywood
- Signal Hill

Table 1: Summary of Forum Affiliation & TCS Information for Agencies in the Project Area

Atlantic Blvd. / I-710 Corridor Agency	Part of I-105 Corridor Project	Part of I-5 / Telegraph Road Corridor Project	Existing TCS	Type of Controllers	Signals Maintained By County
Bell				Type 170	County
Bell Gardens				NEMA	County
Commerce		X	To be upgraded to QuicNet IV	Type 170	Contractor
Compton	X		Zone Monitor IV To be replaced	NEMA	City
Cudahy				Type 170	PEEK
Huntington Park				Traconex, Type 170	City
Long Beach	X		QuicNet IV	Type 170	City
Lynwood	X			Type 170	County
Maywood				Type 170	PEEK
Paramount	X			Type 170	County
Signal Hill				Type 170	Long Beach
South Gate	X		i2TMS	NEMA	City
Vernon			ARIES	NEMA	PEEK

These jurisdictions do not have existing systems and will have the following deployment options depicted in Figure 2:

- **Host their own TCS:** Under this option, the City has its own independently operated traffic control system, which is interfaced into IEN. The City is responsible for maintaining its system.

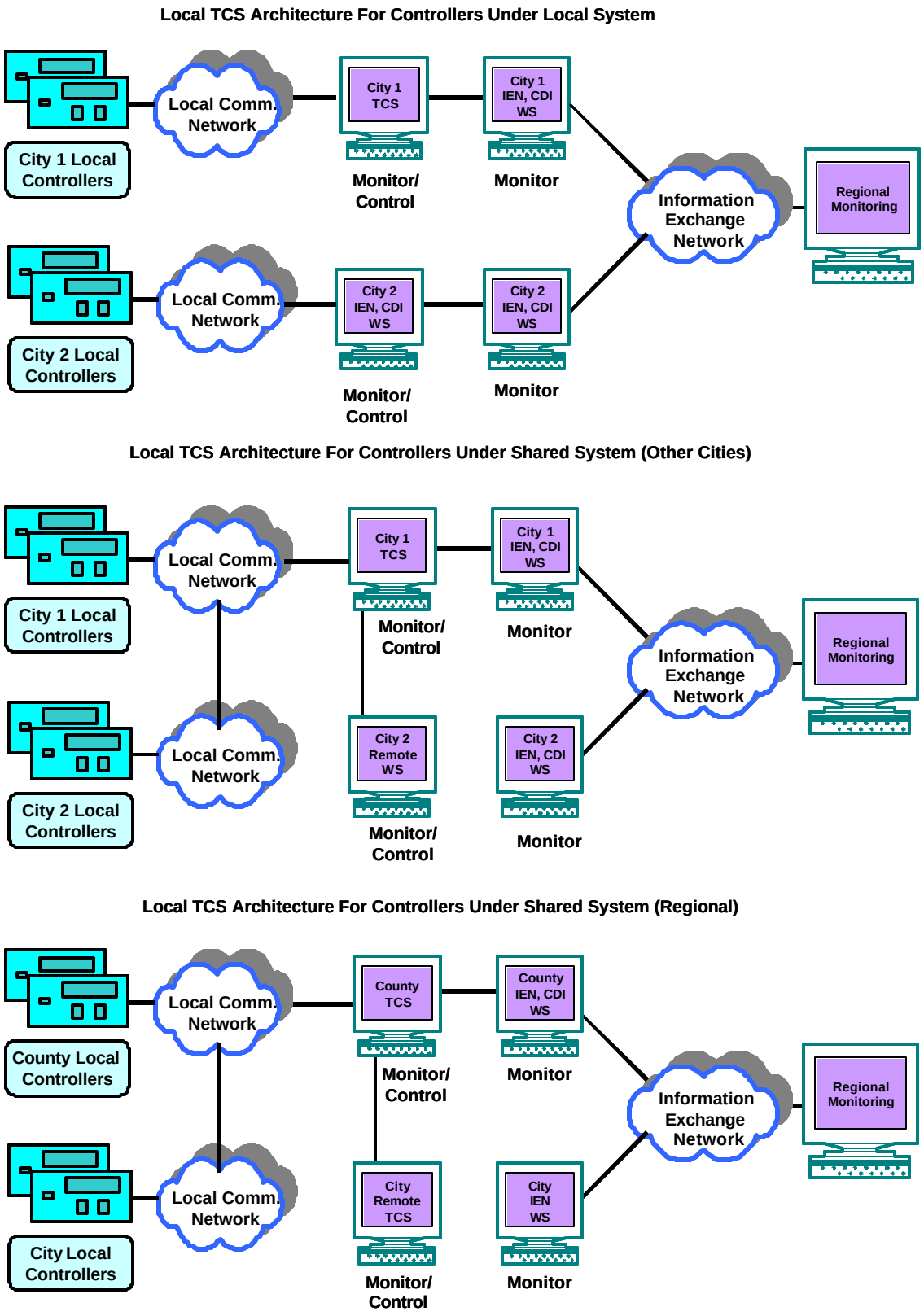

Figure 2: Local TCS Architectures

- **Share TCS with another City in the region:** Under this option, the traffic signals from two or more Cities are connected to one traffic control system. The system resides in one City's TCC, the other Cities have a remote workstation at their site. Through this workstation, the Cities' can monitor and control intersections under their jurisdiction. Each City in the system has total control over its signals, through appropriate user rights, the Cities can view status of other City's signals but can't control them. The City that houses the Traffic Control System is responsible for maintaining it.

- **Share TCS with the County:** Under this option, a local City's signals are connected to County's traffic control system. The system resides at the County TMC, the local City has a remote workstation at its site. Through this workstation, the local City can monitor and control intersections under its jurisdiction. In addition, it is the County's policy that the County will be responsible for maintaining it.

In analyzing these options consideration should be given to the City's desires to have independent systems, the City's ability to maintain TCS server equipment, and space availability.

If a City desires to share a system with another Agency, consideration should be given to existing working relationships between the cities, and equipment compatibility. For example, for a City contracting with the County for signal maintenance, preference should be given to connecting that City's signals to the County system should the City choose to share TCS with another Agency.

It will be necessary to guide the agencies carefully through these options both individually and as a group. The former is necessary to ensure a complete understanding of the options. The latter is necessary to achieve a consensus approach.

Traffic Control System (TCS)

The ATMS will become the cornerstone of the proposed traffic control system that results from these Project findings. The Consultant will perform an analysis for the jurisdictions in the Project area with existing traffic control systems that have not had a similar analysis performed as part of a previous project. This analysis will seek to determine the "best" TCS scenarios that meet their individual needs and preferences (e.g., deploy new TCS, enhance/modify existing TCS, replace existing TCS, multi-agency TCS operation, etc.) and this Project's recommendations. Regardless of the selected TCS scenario for each agency, the ATMS will recommend an interface and any required equipment to enable communication and ensure compatibility with the other agencies in the Gateway Cities Traffic Signal Forum and the Countywide IEN.

Vehicle Detection System (VDS)

Another element of the ATMS is the establishment of a comprehensive vehicle detection system within the Atlantic Boulevard / I-710 Corridor sub-region of the Gateway Cities Traffic Signal Forum. The VDS will supplement the existing traffic signal detectors and collect real-time

traffic data and information at key intersection locations where monitoring of traffic is critical to the movement of vehicles. The number, type, and location of system detectors will be determined by the Consultant after careful consideration of the user needs, system functional requirements, and available budget.

Closed Circuit Television (CCTV) Surveillance

The ATMS will also include deployment of closed circuit television (CCTV) surveillance cameras to provide real-time video monitoring of traffic congestion and incidents. The ATMS will provide the capability to share video images amongst the affected agencies to enhance incident detection, verification, and response capabilities. As with the TCS, provisions will be made to allow inter-jurisdictional monitoring and control of video images amongst the agencies. The number, type, and location of CCTV cameras will be determined by the Consultant after careful consideration of the user needs, system functional requirements, and available budget.

Gateway Cities Traffic Signal Forum Sub-Regional TMC

The sub-regional TMC will function as the Gateway Cities Traffic Signal Forum's central communications hub by maintaining the required traffic signal database for workstation level signal control. In addition, the sub-regional TMC will be the Gateway Cities Traffic Signal Forum's central clearinghouse of multi-modal data/information that provides the appropriate access, control, and dissemination capabilities to the affected agencies. The sub-regional TMC will be capable of controlling the County's traffic signals, as well as monitoring all signals along the Project area. Provisions will be made to allow an individual jurisdiction's signals to be controlled from the sub-regional TMC through pre-approved arrangements, and coordinated responses in the event of congestion, arterial incidents, special events, major incidents, and/or during non-peak hours and weekend.

As part of the I-105 Corridor project, a sub-regional server will be established at a sub-regional TMC. The ATMS systems in the Atlantic Blvd / I-710 Corridor, I-5 / Telegraph Road Corridor, and I-105 Corridor will be connected to this sub-regional server through the Information Exchange Network protocols. All regional data monitoring and sharing will be accomplished through this interface.

The County has already determined that the Gateway Cities Traffic Signal Forum sub-regional TMC will be located at the planned Los Angeles County Regional TMC.

Coordination with Other Regional Systems/Projects

In addition to the Gateway Cities Traffic Signal Forum, and other County Traffic Forum projects, the Consultant will take special consideration to coordinate its efforts in this Project with and/or incorporate the findings of the following systems/projects:

- All County Traffic Signal Synchronization Projects in the I-710 corridor area (e.g., intersection and controller upgrades, signal timing adjustments, etc.)
- City of Long Beach ATMS / TMC
- City of Compton TMC Project

- I-710 Major Corridor Study
- I-5 / Telegraph Road Corridor ITS Improvement Project
- I-105 Corridor ITS Improvement Project
- Port of Long Beach / Los Angeles Advanced Transportation Management, Information, and Security System (ATMIS) Project
- Port of Long Beach (POLB) Incident Management System (e.g. changeable message signs)
- Caltrans District 7 ATMS

Functional Element 2 – Agency Monitoring/Control Workstation Site

The Consultant shall provide the conceptual design for the physical accommodations of a typical local control center (LCC) for each of the affected agencies. Normally, an LCC will consist of a computer system and/or workstation located in each jurisdiction's City Hall (or other location) and will be fully capable of satisfying that jurisdiction's traffic management needs and the requirements of this Project.

The Consultant's conceptual design and preliminary specifications will include the following at a minimum:

- LCC building facility/structure/space specifications
- Schematic floor plan
- Requirements (e.g., user, system, functional, performance, etc)
- Equipment and/or furnishings
- Hardware, computers, monitors, etc.
- Software programs, platforms, operating systems, etc
- Operations and maintenance (O&M) considerations
- Staffing needs
- Training

Please note that the references to the hardware and software components pertain to those items not mentioned in any other tasks in this Project's scope-of-services but necessary to bring the each agency's LCC to full operation.

The Consultant will draw upon the design work already conducted for the I-105 and I-5/Telegraph Road corridor projects to incorporate schematic designs and agency specific layouts so as to capitalize upon existing work products towards the end goal of expediting deployment.

With this baseline established, the Consultant will then conduct an on-site inspection in order to identify preliminary sites/locations for each proposed LCC installation not included in a previous project. The Consultant will then make recommendations on the necessary alterations to this workspace to provide the needed functionality.

For those Cities that are also part of the I-105 ITS Improvement Project, the Consultant will work with those agencies and/or their consultant to ensure that their initial LCC design also is

capable of providing the functionality needed for this Project. In future phases, it is anticipated the Consultant will install the LCC for the affected agencies.

Functional Element 3 – System Integration

Local

This component integrates the entire project's system components and ensures that an open system architecture is maintained. The project components (TCS, CCTV) will be integrated with common interfaces, which will also be used for remotely connected workstations. A standardized and friendly graphical interface will also be designed as part of this component to facilitate system maintenance and training.

All recommendations made by the Siemens ITS Team for this project will be for the implementation of open systems and will be made after careful review of potentially suitable systems for use in this project. The recommendations made will occur in close coordination with any applicable Southern California Priority Corridor Intelligent Transportation Systems (ITS) Projects (, and Regional Traffic Forum Projects. The Siemens ITS Team will build on previous work undertaken by these projects and committees and, where applicable, use completed work products to avoid unnecessary work or duplication of effort.

Regional

The Atlantic Blvd./ I-710 Corridor is one of three projects within the SELAC region. The integration of the Atlantic Blvd./I-710 Corridor into regional ITS must be considered in three steps. The first step would be integration of Atlantic Blvd./I-710 Corridor intersections into the I-5/Telegrapg Road Corridor and I-105 Corridor architectures. This would include expanding the latter two systems to include intersections from Atlantic Blvd./I-710 Corridor where appropriate. The second step would be the integration of ATMSs to be deployed as part of this project into the County architecture. The third step is then to examine the integration of the arterial systems into the regional architecture.

The architectures resulting from other Forum Projects are following the three tier concept local / corridor / regional: corridor networks linking local systems and being interfaced to the regional County system which in turn interfaces with regional systems outside of County such as Caltrans.

As part of the I-105 Corridor project, a sub-regional server will be established at a sub-regional TMC. The ATMS systems in the Atlantic Blvd./I-710 Corridor, I-5/Telegrapg Road Corridor and I-5 Corridor will be connected to this sub-regional server through Information Exchange Network protocols. All regional data monitoring and sharing will be accomplished through this interface.

Figure 3 shows the final stage of regional integration that is currently under consideration; this will provide the means of exchanging data between the major ITS systems, such as the Freeway Management System and the forthcoming RIITS project. The IEN is critical – providing access

to the County's arterial management network. This overview emphasizes how the link between the Atlantic Boulevard/ I-710 Corridor and the sub-regional TMC to be provided by the I-105 Corridor is key. This link provides the corridor access to the IEN network and beyond, to the regional network.

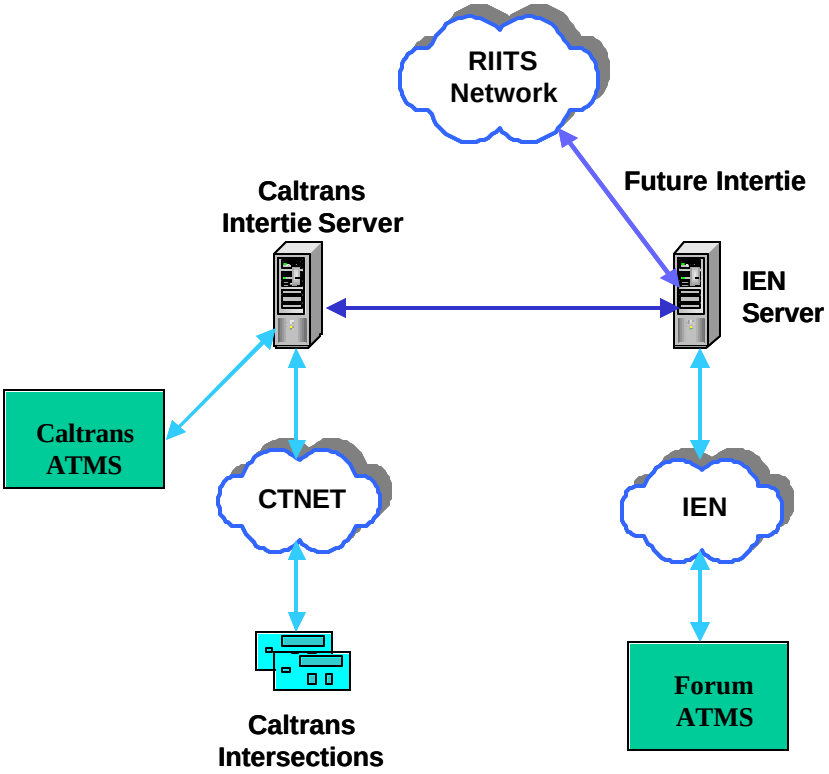

Figure 3: Regional Integration

Functional Element 4 – Communications System

Communications Overview

As in other Corridors, little communications infrastructure exists in the Atlanta Boulevard / I-710 Corridor Project area. The Consultant understands that one of the most critical and costly elements of the ATMS will be the communications network. Therefore, this element includes the design of a communications system capable of supporting the recommended inter-jurisdictional ATMS, each Agency LCC and/or workstation, and the Countywide IEN, as described within this Project. The installation of a communications network is essential to support the traffic signal operating, monitoring, and controlling capabilities of the ATMS and other Project components so that information can be exchanged with other jurisdictions, stakeholders, and systems.

Scope of Communications System Coverage

The Consultant's communications network design for the Project will include three (3) separate communication networks used to support the County, Corridor, and local levels of the ATMS and the sharing of all Project data. This communications network must include links and/or provide for the following:

Local Level Communications Network. Two-way communications between the field infrastructure units (e.g., system detectors, intersection controllers, CCTV cameras, etc.) on arterials of regional significance, and each jurisdiction's LCC.

Corridor Level Communications Network. Two-way communications between each jurisdiction's LCC and the Gateway Cities sub-regional TMC which at this time is slated to be the planned Los Angeles County Regional TMC in Alhambra.

Since the communications system will drive the capability of all Project components, both present and future ITS elements must be considered in the design. Additional primary considerations must be the expandability of the communications system to include other potential stakeholders and users, system expansion to include additional signals, and the cost effectiveness of the system.

Communications Media Options

At this time, possible communications medium technology include, but are not limited to: twisted pair cable, leased telephone lines, CDPD, fiber optic cables, spread spectrum radio, wireless 3G communications, very small aperture terminals, or a combination of the media described above.

Communications Approach

In the initial stage of the Project, the Consultant will conduct an analysis of the user needs and functional requirements of the communications system. Based on this analysis, the Consultant will evaluate several alternative communication modes and recommend the most suitable for the Project. In designing the communications system, the Consultant will research and take advantage of opportunities to reuse existing or planned communications facilities.

The communications planning process that the Consultant will undertake will result in the implementation of reliable communications networks to enable the Project's participating agencies to effectively monitor and control the arterial highway system within their jurisdictions and coordinate with Caltrans freeway operations. The Consultant's approach will includes a Needs Assessment, a determination of the priority Issues & Constraints, and the performance of an Alternatives and Concepts analysis.

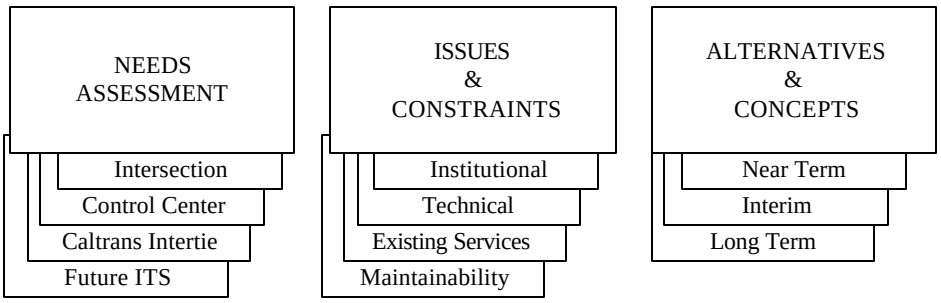

Needs Assessment. The communications planning process starts with a complete understanding of the County's and the other agencies' needs. These will be identified during the initial stages of the Project. Through these efforts, a clear understanding of the near- and long-term objectives of the County will be evaluated to determine the immediate and future communication needs that meet the requirements for a County Master Plan. With this understanding, the Consultant will design and implement communications services that will not only adapt to the existing networks, but meet the requirements for future networks as well.

Issues and Constraints. The second phase is to identify and assess all issues and constraints that impose restrictions or limitations on the design of the communications network(s). The Consultant will review and discuss with the multi-jurisdictional personnel existing, interim, and proposed communications services. The issues and constraints include, at a minimum: Federal Communications Commission (FCC) licensing, permits and policies, budgets, standards, technologies, existing communications compatibilities, and level of maintenance.

Alternative Concepts. The final phase is the development of alternative concepts for providing communications services to meet the needs of the Project. During this phase, the Consultant will assess various media, topology, technology, and architectures for the network. As previously noted, the Consultant will compare each of the wire bound and wireless technologies. It is quite conceivable that a recommendation could include a combination of technologies. However, it is important that any heterogeneous communications system developed is viewed as open and seamless to the information that flows across it. This will result in the preparation of the necessary documents for equipment procurement and installation.

The communications network media type and topology choices will be developed as part of the Communications Alternatives Analysis (Task 2.5.2). Some examples of the more important factors that influence the media type and topology choices include:

Application Requirements. Total bandwidth requirements to transport all applications starting with low speed once-per-second polling and high-speed video images at the local level moving up to and including transfer of high-speed video images and graphics at the regional level.

Existing Infrastructure. Availability of existing communications infrastructure, (i.e., conduit, cable, towers, etc.)

Operating Standards. Open, seamless, and transparent operation at all levels, meeting the requirement to be integrated with existing systems and support installation of future systems.

Operations and Maintenance Requirements. Life cycle costs including recurring usage fees, and maintenance costs.

SPECIAL PROJECT PROVISIONS

Open Systems Architecture

Any recommendations made by the Consultant for this Project shall be for the implementation of "open systems" and shall be made after careful review of potentially suitable systems for use in the Gateway Cities Traffic Signal Forum. This includes completed systems or systems currently under development in other Regional Traffic Forums.

Coordination with Other Projects/Systems

This Project's recommendations shall occur in close coordination with other Regional Traffic Forum Projects throughout Los Angeles County. This coordination is intended to ensure a seamless environment with a common interface – the Countywide IEN. The Consultant shall build on previous work undertaken by these projects/systems and committees and, where applicable, use completed work products to avoid unnecessary work or duplication of effort in this Project.

Project Scope

The Consultant shall perform the tasks and subtasks for Phase 1 pertaining to the major ATMS and/or TCS system improvement components, LCC and/or Agency monitoring/control workstation sites, system integration aspects, and communications system components of the Project and provide deliverables as described herein.

Project Deliverables

For each deliverable outlined in the Agreement, the Consultant shall submit to the County "DRAFT" versions for review and comment. If the first draft is acceptable to the County, the County will distribute copies to all affected Agencies for review and comment prior to being returned to Consultant for preparation of "FINAL" documents. If the first "DRAFT" submitted to the County is not acceptable to the County, it will be returned to the Consultant until it is in a form acceptable for distribution to the affected cities/agencies.

The Consultant will assemble comments provided from the various agencies involved in the project. After assembling the comments, the Consultant and County will review the comments, determine which comments should be incorporated and resolve any conflicting comments. The

Consultant shall address all agency comments that have been agreed to during the review. If after further review, any agency comment is not incorporated into a report it shall be discussed, either verbally or in writing, with the County and the author of the comment.

The Consultant shall use the standard County software set forth below when preparing deliverables. The Consultant shall provide deliverables in the appropriate file format (on CD-ROM and/or via e-mail) as follows:

- Microsoft Word – Word Processing
- Microsoft Excel – Spreadsheet
- Microsoft PowerPoint – Presentation Materials
- Microsoft Project – Project Management and Project Plan

PHASE 1 CONCEPTUAL DESIGN MASTER PLAN DRAFT SCOPE OF SERVICES

The Consultant shall complete the draft or final version (if a draft version is not to be completed for a specific task) of all deliverables for the tasks in this phase after receipt of the Notice to Proceed for this Project from the Director.

Task 1: Project Management

The Consultant shall provide a Project Manager who will act as the principal consultant contact for the DPW and other involved agencies. The designated Project Manager will be responsible for the completion of activities associated with the performance of this Project, including the requirements and alternative analyses, system recommendation, conceptual design, and operations and maintenance and strategic plans. All required products must be delivered to DPW in a timely manner to the satisfaction of the DPW and the affected Agencies. Additional responsibilities include management of project planning activities and the tracking of costs and resources associated with each aspect of the Project.

The Project Manager shall oversee and participate in the day-to-day activities of the Project and shall, therefore, have no concurrent assignments that would interfere with the successful and timely completion of the work related to the Project.

Task 1.1: Project Coordination

The Consultant shall coordinate technical design activities with the involved public and private agencies for each system component of this Project. This will include, but not be limited to, the following list. It should be noted that this task would be billed on a “cost-plus” basis. For the purposes of developing a cost estimate, the number of meetings for each coordination effort area has been estimated.

1. Coordination with the Gateway Cities Traffic Signal Forum agencies throughout the conceptual design phase of this project (up to 20 meetings)
2. Coordination with public and private agencies involved with local and regional ITS projects including Caltrans, DPW, MTA, Gateway Cities agencies, and the Port of Long Beach / Los Angeles to avoid duplication of effort in design and construction (up to 4 meetings).

3. Coordination with other regional and sub-regional projects which may affect this Project, such as I-710 Major Corridor Study, and the Port of Long Beach / Los Angeles ATMIS Project, (up to
   5 meetings).
4. Participation in peer group meetings with consultants in other forums to help resolve compatibility issues (up to 5 meetings).
5. Participation in and providing technical input to the Gateway Cities Traffic Signal Forum when requested to help resolve institutional issues (up to 5 meetings).

Vendor Responsibilities:

1.1.1: Up to 39 meetings as identified above. A document listing the meetings conducted with agencies (meeting type, date, brief description, and agency contact).

Task 1.2: Attend Project Meetings/Make Project Presentations

The Consultant shall attend Project meetings with DPW, MTA, Caltrans, and affected Agencies or organizations as deemed necessary by the DPW to accomplish the tasks and subtasks of this phase. These meetings shall include conducting monthly status meetings with the County to review project progress, discuss any issues that are impeding work on the progress and review work to be performed in the upcoming month.

Project status meetings shall be held with DPW on a monthly basis. As part of these meetings, Consultant will provide a project status report (see Task 1.4) that will provide information on the overall project status, work items completed during the past month, and work to be performed during the upcoming month. As part of this task, Consultant shall also maintain an Action Item list. This list will be updated as part of each progress meeting to identify which action items have been completed, and new issues that have arisen and Action Items to be performed. The Consultant shall prepare meeting minutes for any Project meeting and distribute a copy to meeting participants. Meeting minutes shall summarize each discussion and Action Item.

The Consultant will also be required to make technical presentations, including the use of presentation materials and the distribution of handouts, as needed at Gateway Cities Traffic Signal Forum meetings (e.g., Project Kick-Off, Concept-of-Operations/Requirements stage, System Design Alternatives, etc.), DPW staff meetings, and any other meetings as requested by the DPW or the affected agencies. The Consultant shall obtain prior approval from the DPW on any presentation and handout materials to be distributed at any technical presentation of the Project. The DPW shall be provided with a copy of the distributed materials.

Vendor Responsibilities:

1.2.1: Up to 5 presentations of materials with handouts. A document listing the presentations conducted with agencies.
1.2.2: Up to 10 project status meeting minutes.

Task 1.3: Create Project Web Page

The Consultant shall create a new Internet web page for this Project to be hosted by DPW and consistent with DPW Web Development Standards. The Consultant will work with County staff to place the web pages onto the County's Internet site accessible by the public. The Project web pages will be housed on the DPW's Internet site Traffic subpage (Intelligent Transportation System).

As a first task, the Consultant shall submit to DPW for review and approval the screen layout of the website and all sub-pages. The Consultant will work with County staff to place web pages onto the DPW Internet site. The Consultant will also be required to update information by either providing the DPW with zip files or using File Transfer Protocols (FTP). Prior to updating the web page, the Consultant shall submit to the DPW for review and approval the screen layout of the web page and all sub-pages.

The primary web page shall contain a brief description of the Project. The description shall contain, at a minimum, information on the Projectarea, the involved agencies, the Project objectives, and the DPW and Consultant contact persons for the project. The web page shall also contain sub-pages with additional project information as follows:

Project Status Sub-Page

This page shall contain a summary of the status of the Project. This information shall be updated monthly, at a minimum, including finalized Project's monthly status reports. Information on the date, time, and location of upcoming project related meetings within the next month shall be included.

Documents Sub-Page

This page shall contain downloadable, electronic files of all draft and final deliverables. The Consultant shall be responsible for reviewing/updating the web site monthly, at a minimum. As part of the monthly update, the Consultant shall placed the monthly progress status reports, prepared as part of Task 1.4, onto the website. Prior to each update of the web page or sub-pages, the Consultant shall obtain approval from the DPW for the information to be posted.

Other Relevant Web Sites

This page shall contain a listing of other sites with direct relevance to the Project. This list will include links to specific project websites within the greater Los Angeles area (e.g. I-5 Telegraph Road, etc.) as well as links to Project stakeholders and other sites deemed appropriate by DPW which are relevant to either the Project or the industry in general (i.e., ITS America, ITE subcommittees, etc.).

Vendor Responsibilities:

1.3.1: Screen layout of the web page and sub-pages.
1.3.2: Update web site monthly (at a minimum), including progress reports, deliverable reports etc..

Task 1.4: Prepare Project Reports

The Consultant shall prepare and submit written monthly progress reports and a final report to the DPW detailing the status of work being performed by the Consultant. These reports shall be in a form acceptable to the MTA as part of its Quarterly Narrative Report. The reports shall include, but not be limited to:

- A narrative of the tasks accomplished in that month
- A review of any incomplete tasks and the reasons why they were not completed
- An outline of the tasks anticipated to be accomplished in the next month
- A summary of problems which occurred during the month
- Any anticipated problems
- An updated Project schedule
- A list of outstanding issues and deliverables
- The current status of those issues and deliverables
- An invoice as required by this Agreement
- A summary of the percent completion for each task of the Project.

The Consultant shall also prepare claims, invoices, billings, and other financial information for review and approval by the DPW, as required by the Agreement.

Vendor Responsibilities:

1.4.1: Monthly progress reports and final report.
1.4.2: Financial reports, billings, and invoices.

Task 2: Preliminary/Conceptual Design

The Consultant shall take advantage of the work that has been successfully accomplished and completed on other Forum Projects. This approach has three distinct elements:

- Capture the output from other Forum projects and utilize them for this Project with relevant updates.
- Carry out a number of tasks in parallel allowing further reduction in schedule to complete the Master Plan.
- Prepare a list of all data elements that need to collected from the agencies for various sub-tasks and carry out a one-time effort early in the project to collect the data. This data collection task will start as part of the system inventory and operational objectives task.

Task 2.1: Identify Stakeholder Objectives

The Consultant shall identify primary agency stakeholders and potential participating stakeholders and users and their operational objectives relative to the major system functional elements of the Project and future ITS elements to be integrated into the system.

It is envisioned that the project stakeholders will include the following:

- Los Angeles County DPW
- Caltrans
- MTA
- Subregional Transit Agencies
- Special Event Generators
- Local Cities (13)
  - Bell
  - Bell Gardens
  - Commerce
  - Compton
  - Cudahy
  - Huntington Park
  - Long Beach
  - Lynwood
  - Maywood
  - Paramount
  - Signal Hill
  - South Gate
  - Vernon

The Consultant shall schedule and conduct Project pre-design meetings with each of the primary agency stakeholders and potential participating stakeholders for the purpose of, but not limited to:

1. Identifying primary agency stakeholders for the operation and management of the system and other potential participating stakeholders and users that could benefit from the Project
2. Identifying agency and stakeholder operational objectives and user and system functional performance requirements
3. Obtaining design standards
4. Obtaining pertinent plans and status of any project which may affect this Project
5. Obtaining information on the agencies existing traffic signal control systems and related infrastructure (detectors, communications networks, etc.). This information will be gathered during the meeting with the local agency, and if required through additional meetings and information requests.
6. The Consultant shall conduct field review of up to 200 intersections in the Project area and collect information on existing field infrastructure. The information collected will be the same as the one collected for I-5/Telegarph Road Project.

An initial meeting will be held individually with each agency so that there can be a focus on the needs and operational characteristics of the individual agency. A report of each meeting will be compiled. An analysis will be made of the current traffic control equipment, systems and agency resources. This will include an update of the information compiled by the original LA County DPW SELAC studies, the IMAJINE project, the I-105 Corridor Project and the I-5/Telegraph Road Project. The report shall contain a summary of the traffic signal infrastructure, any traffic control system deficiencies, a description of potential upgrades to the city's infrastructure and system, and transit availability as identified by local agencies, transit agencies, and Caltrans.

<u>Deliverables:</u>

2.1.1 Draft Stakeholders' Operational Objectives Report.
2.1.2 Final Stakeholders' Operational Objectives Report.

Task 2.2: Concept-of-Operations

The Consultant shall prepare an Atlantic Boulevard / I-710 Corridor ATMS Project Concept of Operations (ConOps) document. The ConOps documents goals, objectives, and vision for the

Project. The ConOps describes the way the individual projects and systems will interact with each other to meet the goals and objectives of the overall Project. The ConOps document will serve the following wide range of program purposes:

- Roadmap on the ordering and/or concurrency of the way systems will be developed.
- Documents stakeholder requirements, ideas, notions and expectations of the system Identifies different levels of operation, and provides guidance and direction on how the systems should be operated.

The ConOps will identify the expected operational requirements, and expected benefits that agencies can receive depending on the level of involvement that the agency is willing to commit to the operations of their system. System operations will be defined at three different levels including:

- Level 1 – Agencies which host only ATMS Client functions
- Level 2 – Agencies which host ATMS server functions for their own jurisdiction.
- Level 3 – Agencies which ATMS server functions for their jurisdiction as well as other City(s)

This definition of operational requirements and benefits will be developed at a high-level so that the participating agencies can be provided with a view of the different levels that the system can be operated at, and the benefits associated with each level of operation. As part of the ConOps development, the Consultant, working with the County, will make an initial determination of the operations level of each of the agencies involved in the project.

To facilitate the development of the ConOps the Consultant will describe a "Day-in-the-Life" for each proposed level of operation . The purpose is to to help determine how their operations can be improved and provide preliminary staffing and operational levels. The scenarios will be determined based on different factors including agency staff size, the number of intersections they manage, and their operations (e.g. hands-on operations versus a hands-off operation).

The ConOps will be written in a fashion that is easily understood by all of the stakeholders of the system, not full of technical jargon. The initial ConOps should be considered a living document which will be modified as necessary to reflect amongst other things, agency experience and operational policy changes.. As the project progresses through the requirements and architecture, technical and institutional tradeoffs will often necessitate the modification of the ConOps document until the final high level requirements and architecture is completed. At this time the ConOps may be considered a configuration item along with the requirements and architecture.

As part of the I-5/Telegraph Road Corridor and I-105 Corridor Projects, Concept of Operations have been developed. The Consultant shall use these documents as a starting point for this Project. On the basis of the Operational Objectives and through the individual meetings conducted as part of Task 2.2, the Consultant would have already gathered information on how the agencies currently operate and inter-operate, as well as any concerns or desires toward inter-operation. At these meetings, the Consultant would have discussed with the agencies in I-105 and I-5/Telegraph Road Corridor Projects if the agencies have additional requirements since the requirements for these projects were published. This task will document the consensus decisions

that were attained from the individual meetings and develop a strawman Concept of Operations for the Atlantic Boulevard /I-710 Corridor.

Deliverables:

2.2.1: Draft Initial Concept of Operations Report.
2.2.2: Final Initial Concept of Operations Report.

Task 2.3: Requirements Analysis

Task 2.3.1: ATMS and Communications User and System Requirements

The Concept of Operations defined in Task 2.2 and the User Requirements and System Requirements that have been identified in the I-5/Telegraph Road Corridor and I-105 Corridor projects will be used as the foundation for this task.

The Consultant will review the Requirements from I-5/Telegraph Road and I-105 Corridor Projects. With this background and on the basis of the individual meetings and discussions on the Concept of Operations, any unique requirements not included in the two previous projects will be identified. The Consultant will then identify modifications to the previously defined requirements in order to derive the more detailed User and System Requirements.

The Requirements themselves will be individually numbered using an enhanced version of the identifications coded derived as part of the I-5/Telegraph Road requirements process. This numbering system is as follows:

- UR: User Requirement
- FR: Functional Requirement
- SR: System Requirement
- PR: Performance Requirement
- TS: Traffic Control System
- IS: Integration System
- CS: Communications System

Thus Requirement FR TS 3.4.1 can be clearly identified as a functional requirement for traffic control system. This will assist in tracking requirements through the course of the project. Requirements will be compiled in an MS Access database for ease of tracking and reference.

The deliverable for this task would be an update of the deliverable 3.6 from I-5 / Telegraph Road Project. While updating this deliverable, the consultant will take into consideration the following requirements associated with each section of the document:

ATMS User Requirements

The User Requirements will define the user operational and functional requirements of the ATMS and include those aspects of the Project related to the overall integration of the systems in the Project and in the region. The document will identify the system users and the desired system operations and functions. This document shall include, but not be limited to, the following information:

- Data collection
- Future ITS elements
- Information exchange
- Level of control
- Modes of operation
- Security/access
- Inter-jurisdictional requirements
- O&M requirements
- Staffing and training requirements
- Cost requirements
- Public outreach

ATMS Functional Requirements

Based on the user requirements, the Consultant shall develop System Functional Requirements.. The system functional requirements will be identified as they relates to the Project user needs.

These requirements shall also contain recommendations on upgrades to the existing vehicle detection systems including the installation of new system detectors as necessary for full implementation of the ATMS and integrated systems. This document shall be complete, comprehensive, and provide enough information to proceed to the next tasks (Area Architecture, Alternative Analysis and Conceptual Design). The system functional requirements shall address, but not be limited to, the following requirements:

- Needs/requirements of existing systems;
- System performance;
- Equipment and technology;
- Interoperability;
- Expandability to provide additional ITS elements;
- Implementation costs;
- Operations;
- Maintenance;
- System Interface;
- Reliability;
- National and International Standards, such as National Transportation Communications for ITS Protocol (NTCIP); and
- Scalability.

Communications User and Functional Requirements

The Consultant shall obtain the information needed to identify the communications system user and functional requirements. This may require follow-up visits to individual cities and agencies

to discuss issues and concerns. This will also require field reviews to verify existing communications infrastructure. As part of this task, the Consultant shall take into account any applicable information gathered on other Gateway Cities Traffic Signal Forum projects including the I-5/Telegraph Road and I-105 corridor projects.

Based on the input received from the agencies, prior reports, and requirements gathered from previous tasks and field reviews, the Consultant shall develop Communications System User and Functional Requirements.. The report shall identify the needs and concerns of the Project agencies with respect to the communications infrastructure. Thisreport shall also document the Project's communications requirements based on the transportation system design. This document shall include, but not be limited to, data communications requirements for any recommended system and component included in this system such as the following:

- City workstations/control sites
- Future ITS field elements, such as CCTV, HAR, and CMS
- Integration system requirements
- Non transportation-related issues
- Public relations issues
- O&M issues
- Expandability
- Bandwidth requirement
- Reliability
- Redundancy
- Diversity
- Performance requirements
- Communications system access points
- Potential bottlenecks and weak links
- Resource and cost sharing

Deliverables:

2.3.1.1: Draft ATMS and Communications User and System Requirements Report.
2.3.1.2: Final ATMS and Communications User and System Requirements Report.

Task 2.3.2: Integration System User and System Requirements

The Consultant shall update the deliverable 3.5 from I-5/Telegraph Road as follows:

Integration System User Requirements

User Requirements define the transportation system integration user operational and functional requirements. This document will identify the system users and the desired system operation and function with respect to system integration. The development of these requirements shall use the existing County Information Exchange Network (IEN) as the basis for the integration system and shall focus on the definition of any enhancements or modifications required to the IEN to meet the user needs. This user requirements shall include, but not be limited to, the following:

- Operational requirements
    - Data collection
    - Future ITS elements

    - Information exchange
    - Level of control
    - Modes of operation
- Security
- Functional requirements
- Inter-jurisdictional requirements
- Maintenance requirements
- Staffing and training requirements
- Cost requirements
- Public relations/political considerations

Integration System Functional Requirements

The Consultant shall develop Transportation Integration System Functional Requirements by applying the integration system user requirements to meet the needs of this Project.
This document shall identify the integration system functional requirements as they relate to the system integration user needs. This document shall be complete, comprehensive, and provide enough information to proceed to the next tasks (System Architecture, Alternative Analysis and Conceptual Design) and shall include, but not be limited to, the following requirements:

- System performance
- Interface requirements between system components
- Interface protocol standards
- Interface requirements between systems within and outside the forum area
- Equipment and technology
- Availability of technology
- Interoperability
- Expandability
- Implementation costs
- Operation
- Maintenance
- Existing infrastructure
- Reliability
- Flexibility
- Extensibility
-

Deliverables:

2.3.2.1 Draft Integration System User and System Requirements Report.
2.3.2:2 Final Integration System User and System Requirements Report.

Task 2.4: System Architecture

The Consultant shall develop an overall system architecture showing the inter-relationship between the major functional areas to be included within the project. This architecture will serve as a high-level system design and will show the data flows between the functional areas. The system architecture will also provide a high-level view of how the individual agencies fit together and how the agencies interact with the County, Caltrans and other area-wide

stakeholders. The Consultant will utilize, update, and expand upon completed work products already proposed in the sub-region from projects such as the I-5/Telegraph Road and I-105 Corridor High Level Design to define the system architecture. In addition, individual architectures for each of the major areas shall be developed in accordance with the following:

ATMS

The Architecture definition of the ATMS shall include: identifying the elements included within the ATMS, the overall functionality of the system, data flows between ATMS elements, and definition of the ATMS interface requirements.

Communications

The Architecture definition of the communications system shall include, but not be limited to, the definition of interface requirements to other system elements, and the definition of the overall system functionality.

Local City Control Site

The Architecture definition of a local city control site shall include the definition of the overall functionality of the local control workstations, and the definition of system interfaces including user interfaces and interfaces to other project elements. The Consultant shall also develop a typical workstation control center layout diagram.

Integrated Systems

The Architecture definition of the transportation integration system shall include definition of system interfaces including user interfaces and interfaces to other project elements, and the definition of the overall system functionality.

Deliverables:

2.4.1: Draft Area Architecture Definition Report (including Typical City Control Site Schematic Diagram)
2.4.2: Final Area Architecture Definition Report. (including Typical City Control Site Schematic Diagram)

Task 2.5: Alternative Analysis and Recommendations

Task 2.5.1: ATMS Analysis and Recommendations

Based on the User and Functional Requirements, the Consultant shall perform an alternative analysis to evaluate different ATMS and vehicle detection systems, where necessary, for use in the Project area. The Consultant will utilize and update completed work products from projects such as the I-5/Telegraph Road Corridor in developing the analysis. The Consultant's review shall include, but not be limited to, existing ATMS owned or being developed by the County and affected agencies for use in this traffic forum to determine if they can meet the user and

functional requirements as identified in the previous tasks. The Consultant will use the findings of the commercial-off the-shelf (COTS) traffic control system analyses and reports currently being completed by other sub-regional traffic signal forum projects as the primary input for this task. Once this review is complete, the Consultant shall update this report to meet the specific requirements defined in previous tasks.

The ATMS alternative analysis will update the analysis performed in the I-5/Telegraph Road. The Consultant shall review and update the functionality comparison matrix developed for the I-5 Telegraph Road Corridor project which determined the benefits and limitations of each system. systemx. The functionality matrix will be updated for the following six systems:

- Pyramids
- KITS
- TranSuite
- QuicNet4
- i2 TMS
- icons

The matrix shall be updated as necessary to include any new functionality identified by the Project Team for the new agencies.

The Consultant shall include in its criteria for analysis that any required equipment shall be readily available, current state-of-the-art, off-the-shelf, and manufactured from well-established and reputable suppliers.

The alternatives analysis for the ATMS will be performed for the remaining six agencies/areas not included in the I-5/Telegraph Road and I-105 corridor projects. These cities include Bell, Bell Gardens, Cudahy, Huntington Park, Maywood, , and Vernon. The alternatives analysis will not be repeated for agencies/areas that have already been analyzed as part of a previous project. For the new analysis to be performed, the analysis will be tailored to meet the needs of the specific agencies/areas and identify the specific options that are applicable for that agency/area.

As part of the analysis, the high-level design developed as part of this task will be updated to reflect the implementation alternatives for each agency/area. Where applicable, the alternatives analysis shall also examine the possibility of developing multi-jurisdictional systems to meet the needs of many agencies. These multi-jurisdictional systems may take the form of incorporating agency-owned signal into a larger County-owned TCS, or a separate system that is installed to serve two or three agencies.

With respect to the detection systems, the analysis shall comprise a comparison of technologies and identification of functionality rather than an evaluation of specific products from individual suppliers. It is anticipated that the selected system will be a hybrid system, consisting of a combination of numerous detection system types. The selected system will also likely be based upon the requirements of the component for which detection is required or desired.

For detection system, location analysis will be carried out to examine potential locations for system detection placement. This analysis will take into account any existing advanced detectors and the potential of using them as system detectors as is, if the detectors are unganged or using them by unganging them if they are not.

For CCTV systems, the alternatives analysis will examine potential locations, equipment requirements and operations alternatives with regards to individual CCTV systems for each agency versus a multi-jurisdictional system to support multiple agencies.

The development of this Project component shall consider any known effective means of satisfying the user and functional requirements and should clearly indicate which requirements, if any, cannot be met by each system or technology evaluated. The completed analysis should show that the recommended system is the most effective, reliable, and economical system available.

Based upon the results of the ATMS Alternatives Analyses and careful consideration of the variables involved, the Consultant shall prepare detailed technical recommendations for the best ATMS(s) to be used in the Project area. The recommended ATMS may involve the replacement and/or maintenance and integration of any existing traffic control systems. This working paper shall include a comprehensive discussion on why the particular system was selected and a discussion of the methodology used to make the recommendation.

The Consultant shall also prepare recommendations regarding the placement and technology used to provide vehicle detection and video surveillance. The recommendations for these technologies shall include information on how the technologies will be integrated with the ATMS, and the LCC.

Deliverables:

2.5.1.1: Draft ATMS Alternative Analysis and Recommendations Document.
2.5.1.2: Final ATMS Alternative Analysis and Recommendations Document.
2.5.1.3: Draft System Detection Technology Analysis and Recommendations
2.5.1.4: Final System Detection Technology Analysis and Recommendations
2.5.1.5: Draft CCTV Location Analysis
2.5.1.6: Final CCTV Location Analysis
2.5.1.7: Draft Detection Location Analysis
2.5.1.8: Final Detection Location Analysis

Task 2.5.2: Communications Alternative Analysis and Recommendations

Based on the user and functional requirements, the Consultant shall perform an alternative analysis that will evaluate several different communication alternatives for use in the Project area. It is anticipated that the selected system will be a hybrid system, consisting of a combination of numerous communication types. The selected system also will likely be based upon the requirements of the component for which communication is required or desired. These elements will be combined in the most reliable, economical,

and efficient way.

The analysis will be performed on two levels. The first level of the analysis will be conducted to address the communications networks necessary for the individual cities/traffic control systems to be deployed in the Project area. It will be generic and consider the suitability of various communications technologies to the Project requirements. The analysis will include all of the field devices including traffic control signals, detectors and video surveillance as required.

This level of analysis will take into account the communications needs for agencies without existing communication and/or traffic control systems as well as the needs of agencies . with existing communication and/or traffic control systems, and include those systems and communications to be deployed via the I-5/Telegraph Road Corridor and I-105 Corridor Projects.The first-level analysis will focus on the requirements of these agencies/systems and evaluate alternatives and develop recommendations.

The second level will include a Project-wide communications analysis to investigate the communications needs to integrate the individual agencies/systems in the Project onto an integrated communications network.

A similar comparison matrix was developed for the I-5/Telegraph Road corridor project which determined the benefits and limitations of each communications system. The Consultant shall review and update the referenced matrix to incorporate it within this Project.

The Consultant carried out an extensive communications analysis for both levels as part of I-5/Telegraph Road Corridor Project. The document developed for generic communications analysis will be directly applicable here with modifications for any new requirements and any upgrades to available communications technologies since the I-5/Telegraph Road Corridor analysis. The Consultant shall utilize and update completed work products from the I-5/Telegraph Road and I-105 corridor projects, South Bay ITS – Part II, and Pomona Valley ITS Improvements Project, as required, and carry out the communications network analysis as follows.

Based upon the results of the Communication System Alternative Analysis and careful consideration of the variables, the Consultant shall prepare a detailed technical recommendation for the best Communication System to be used in the Project area. This report shall include a comprehensive discussion on why this combination of communication elements was selected and a discussion of the methodology used to make the recommendation.

Deliverables:

2.5.2.1: Draft Communication System Alternative Analysis and Recommendations Report.
2.5.2.2: Final Communication System Alternative Analysis and Recommendations Report.

Task 2.5.3: Local Control Center Alternative Analysis

The Consultant shall identify any local agency traffic signal control site locations requiring physical alterations to meet the typical control site design characteristics. The first step of this task will be to conduct site visits with those seven agencies (Bell, Bell Gardens, Cudahy, Huntington Park, Maywood, Signal Hill and Vernon) which are not included in previous projects to review the space that may be used to house an LCC. As part of these site visits, the Consultant will meet with the agency to discuss available space, operations and maintenance needs, and costs. It is envisioned that the proposed site visits and information request for this task may be combined with other data collection efforts within the overall project. Once the interviews are complete, each agency will be placed into one of three categories:

- Level 1 – Agencies which host only ATMS Client functions
- Level 2 – Agencies which host ATMS server functions for their own jurisdiction.
- Level 3 – Agencies which ATMS server functions for their jurisdiction as well as other City(s)

Generalized alternatives will be developed for each level and alternative layouts will describe the amount of equipment to be deployed at each LCC level (e.g., workstation, TCS hardware, etc.). Once complete, a text description for each location will be prepared which identifies a recommended approach for deployment of the LCC. The recommended approach will be further clarified within the conceptual design task (Task 2.6). As part of this analysis, the Consultant shall develop a report that presents the space requirements for each of the Agencies, recommendations on how that space can be provided within existing facilities, and estimated costs for any building modifications. Schematic layouts will be provided for the recommended approach within the conceptual design.

The Consultant shall review the documents and analysis developed for the I-5/Telegraph Road and I-105 corridor projects and determine if the designs for the common agencies are adequate to meet this Project's objectives and requirements.

Based on the results of the Local City Traffic Signal Control Site and Computer Systems Alternative Analyses, and careful consideration of the variables involved, the Consultant shall recommend local city traffic signal control sites and computer systems to be implemented with this Project. This report shall include a comprehensive discussion on why these elements were selected and a discussion of the methodology used to make the recommendation.

The recommendation made by the Consultant shall consider known effective means of satisfying the functional requirements. Once the preliminary site selections have been reviewed and approved by the affected jurisdictions, then the Consultant shall recommend the best local city traffic signal control sites, including any necessary local city traffic signal control site computer systems not previously covered herein.

<u>Deliverables:</u>

2.5.3.1: Draft Local Control Center Analysis and Recommendations Report
2.5.3.2: Final Local Control Center Analysis and Recommendations Report

Task 2.6: Conceptual Design Report

At the completion of the previous tasks of the Project, the Consultant shall prepare a detailed, comprehensive Conceptual Design report for the Project elements accompanied by an Executive Summary report.

This Conceptual Design Report shall include maps, graphs, and subsystem technical reports summarizing the final conceptual recommendations for each system and be in a form detailed enough such that it can be used as the foundation for the detailed design.

The Consultant will also be required to account for system elements in other consultant contracts that may affect Consultant's system design. This report will be concise and easily understandable by non-technical personnel. The areas to be addressed by the Conceptual Design are as follows:

ATMS

The Consultant shall prepare the Conceptual Design of the selected ATMS, CCTV systems, vehicle detection system and its associated components as agreed upon by the DPW, MTA, and the affected agencies. This Conceptual Design shall consist of a detailed and comprehensive technical working paper defining the system architecture, interface, software, hardware requirements and the overall functionality of the system. This document will also include the conceptual design of the computer system hardware, and any associated peripherals, software, and software modules for the complete ATMS.

The Conceptual Design shall identify the amount, type (technology), and location of the vehicle detectors that forms part of the Vehicle Detection System. Additionally CCTV locations and technology shall be defined.

In addition to the items indicated above, the Conceptual Design report shall include, but not be limited to, a configuration management plan, construction staging plans, and cut over plans (if necessary) showing the transition from any existing system(s) to the new system for each Project component.

The Consultant will also be required to account for system elements in other consultant contracts that may affect Consultant’s system design. The Conceptual Design Document shall be in a form and detailed enough such that it can be used as the foundation for the Detailed Design Phase.

Communications

The Consultant shall prepare the Conceptual Design of the selected Communication System and any associated components required to make the system operational, as agreed upon by the DPW, MTA, and the affected agencies. This Conceptual Design shall consist of a detailed and comprehensive technical working paper defining the system architecture, interface requirements, and the overall functionality of the system.

The Conceptual Design shall provide for two-way communications between field controllers and office personnel. The Consultant will also be required to account for system elements in other consultant contracts, which may affect Consultant's system design. This Conceptual Design document shall be in a form and detailed enough such that it can be used as the foundation for the detailed design.

In addition to the items indicated above, the Conceptual Design shall include, but not be limited to, a configuration management plan, construction staging plans, and cut over plans (if necessary) showing the transition from the existing to the new system for each system component.

Local City Control Site

The Consultant shall prepare the Conceptual Design for each local city control site, including associated equipment, furnishings and computer system(s) as agreed upon by the DPW, MTA, and the affected agencies as part of previous tasks. This Conceptual Design report shall consist of a comprehensive technical working paper defining preliminary site locations and space requirements, system architecture, staffing, training, and interface requirements, and the overall functionality of each computer system and typical local city control site. Recommendations on necessary alterations to these proposed workspaces to provide the needed functionality shall also be provided.

The Consultant will also be required to account for other computer and component system requirements, such as those involved with other projects and elements in other consultant contracts that may affect Consultant's design.

In addition to the items indicated above, the Conceptual Design shall include, but not be limited to, a configuration management plan, and cut over plans (if necessary) showing the transition from the existing to the new system for each system component.

This Conceptual Design document shall be in a form and detailed enough such that it can be used as the foundation for the detailed design.

Integrated Systems

The Consultant shall prepare the Conceptual Design of an open system architecture, general equipment, media specifications, and 'typical' configurations for communications between the ATMS and the IEN. Potential modifications to the IEN may include the integration of additional traffic control systems, additional corridor servers, and CCTV video and control.

This Conceptual Design shall consist of a detailed and comprehensive technical working paper defining the system architecture, interface requirements, the overall functionality of the system. The Consultant will also be required to account for system elements in other consultant contracts that may affect Consultant's system design.

Recommendations made by the CONSULTANT shall be for the development of "open systems"

to potentially integrate with other regional systems. This includes completed systems or systems currently under development in other traffic corridors. This development shall occur in close coordination with any applicable Southern California Priority Corridor ITS Steering Committee Projects, Los Angeles/Ventura County ITS Coordinating Committee Projects, and Regional Traffic Forum Projects throughout Los Angeles County to insure a seamless environment with a common interface.

In addition to the items listed above, the Conceptual Design shall include, but not be limited to, a configuration management plan, construction staging plans, and cut over plans (if necessary) showing the transition from the existing to the new system for each system component.

Deliverables:

2.6.1: Draft Conceptual Design Report (including Executive Summary)

Task 2.7: Operations, Management and Maintenance Plan

The Consultant will be required to develop an Operations, Management and Maintenance (OM&M) Plan for the proposed Conceptual Design of the Project that provides a detailed breakdown of the total OM&M costs for the proposed system conceptual design.

This task is not envisioned to develop individual OM&M plans for each and every agency within the project boundaries. Rather, it is envisioned that the OM&M plan will cover four (4) varying levels of operational scenarios:

- Level 1 – Agencies which host only ATMS Client functions
- Level 2 – Agencies which host ATMS server functions for their own jurisdiction.
- Level 3 – Agencies which ATMS server functions for their jurisdiction as well as other City(s)
-

At a minimum, the OM&M plan should consider the required personnel skill levels and staffing costs, and the recurring and life cycle costs for capital facilities and space, equipment, material, supplies, procurement, and installation for the following:

- Recommended staffing plan (time of day, days of week) for operating and managing agency workstations and software systems
- Traffic signal control system and system loops infrastructure maintenance
- Maintenance of other ITS field devices
- Periodic operating system and software version upgrades
- Periodic computer hardware replacement
- Hardware and software technical support and maintenance
- Computer database maintenance
- Computer system configuration management
- Telecommunications infrastructure operation and maintenance
- Map database maintenance
- Employee training

- Additional building maintenance, operations or communication costs to operate the agency and stakeholder work stations.

The costs shall be presented in annual terms, with total costs and breakdowns by level, and in a clear and an easily understandable format, including graphs and charts, if necessary. The plan should be in a form that can be easily interpreted by both technical and non-technical personnel, such as city administrators and maintenance personnel. This plan shall also include a preliminary discussion on possible cost and resource sharing options, if any.

Deliverables:

2.7.1: Draft Operations, Management and Maintenance Plan Report
2.7.2: Final Operations, Management and Maintenance Plan Report

Task 2.8: Conceptual Design Workshop

At the completion of the Conceptual Design and OM&M Plan, the Consultant will conduct a Conceptual Design workshop with the project stakeholders. The purpose of this workshop will be to present the project recommendations, design elements and operational requirements with the goal of achieving stakeholder consensus. This workshop will be a ½ day meeting at a facility to be provided by the County.

Deliverables:

2.8.1: Conceptual Design Workshop including presentation material and handouts

Task 2.9: City Concurrence *(as needed task)*

Based upon the results of previous tasks, the Consultant shall, with the assistance of the County, Gateway Cities Forum agencies, and other agencies as appropriate, obtain city concurrence on the proposed Conceptual Design and the OM&M Plan. The Consultant shall conduct meetings with the primary agencies to discuss the approval process and gain concurrence from these agencies on the proposed Conceptual Design. These meetings will be conducted after the draft of each document has been prepared. This will allow for agency comments to be incorporated into the final documents.

Deliverables:

2.9.1: A document listing the meetings/presentations conducted with the Project agencies
2.9.2: A binding letter/resolution with each Project agency indicating concurrence with the plan and commitment to the overall project

Task 2.10: Final Conceptual Design Report

The Consultant shall modify the Conceptual Design Report based upon comments to the OM&M Plan and produce a Final Conceptual Design Report that will define the final system design and be in a form that will enable the initiation of the Detailed Design Phase (Phase No. 2). The final

Conceptual Design Report shall provide details for two recommended scenarios. One recommendation will describe the proposed tasks as if this project had unlimited funds and will be able to fund implementation of all tasks that would completely meet the Project objectives. The alternative Conceptual Design Report will describe the deployment of particular tasks that would meet the current available budget and allotted timeframe.

As part of the Final Conceptual Design Report, the Consultant shall prepare a Project budget indicating the anticipated use of funds (Project Budget). This Project Budget shall include, but not be limited to:

- An estimated cash flow chart by quarter
- A breakdown of expenditures by task and subtask (to the extent known)

Also as part of the Final Conceptual Design Report, the Consultant shall prepare a Project schedule detailing the anticipated start and end dates of each task and subtask (CDR Project Schedule). The CDR Project Schedule shall include, but not be limited to:

- Project milestones
- Schedule of deliverables
- Project duration
- Critical path

The CDR Project Schedule should also include appropriate agency review periods for each document and work product so as to provide a realistic estimation of the Project's duration.

An Executive Summary shall accompany this report.

Deliverables:

2.10.1: Draft Final Conceptual Design Report (including Executive Summary)
2.10.2: Final Conceptual Design Report (including Executive Summary)

Task 2.11: Early Deployment

As part of the Project's overall conceptual design phase, the Consultant will proceed immediately with Early Deployment Project (s)(EDP) which poses minimum risk for deployment prior to completion of the Conceptual Design of the Corridor. These projects may include the expansion of existing traffic control systems and/or developing and installing the Information Exchange Network (IEN) for agencies with existing systems. Immediately after the initial interviews with the agencies, the Consultant will define early deployment projects, discuss them with the concerned cities, the County, and the MTA and prepare scopes of work and budgetary cost estimates for their implementation.

The Consultant shall consider various factors in selecting early deployment projects, such as: consensus building, willingness of agencies to operate and maintain components proposed for deployment, budget impact, feasibility, potential benefits, and other factors that could change the

outcome of the case. The Consultant shall also indicate any impact on the deployment of this schedule on the completion of Phase I, Conceptual Design.

For each proposed Early Deployment Project, a detailed scope of work will be submitted to Public Works and the affected agency for their approval. The scope of work will include:

- An identification of the impacted users and/or agencies;
- The traffic data needed to provide the particular product/service, and how that data will be obtained including the hardware and software communication needs;
- An analysis of how the product/service enhances the agencies within the Project area;
- The cost estimates to design, develop, and deploy;
- Fee schedule (illustrating the design and implementation cost);
- A description of the deployment area, and a breakdown by jurisdiction, if applicable;
- An estimate of the operations and maintenance costs of the product or service, including the public agency operating and maintenance and management costs, if applicable;
- Deployment schedule;
- The anticipated benefits, users, etc to be generated by the service.

These Early Deployment Projects may include, but is not limited to, the following proposals:

- Expand TCS coverage areas in the cities of Commerce, Compton, Lynwood, Paramount, , South Gate, and County and Caltrans jurisdictions. These cities either already have TCS or would have been equipped with one as part of I-5/Telegraph Road Corridor or I-105 Corridor Projects. Using either the existing communications infrastructure (if any exists) or deploying leased lines or wireless communications, the intersections belonging to these cities can be easily brought on line. This may involve the following steps:

    - Replacement of old controllers
    - Communications analysis to determine most suitable deployment media – leased lines or wireless. This will require contact with telephone company to determine connection costs, and survey of the area for availability of wireless service.
    - Deployment of suitable communications media
    - System integration.

- Replacement of Traffic Control System at the City of Vernon

  If it is determined that the traffic control system at the City of Vernon needs to be replaced, it should be done as part of early deployment. The City has fiber on two of its major streets (Santa Fe Ave and Soto St) which are part of this project area.

Upon deployment of an EDP, quarterly status reports will be submitted to the Project stakeholders throughout the evaluation period. The installed EDP will be incorporated into the overall conceptual design phase of the Project. It is anticipated these projects will be developed during, and possibly following, the completion of the Project's Conceptual Design.

The Consultant shall commence the development of each EDP upon its approval by DPW and issuance of its associated Task Order.

The Consultant, upon receipt of each early deployment task order, will proceed with design, implementation and evaluation of the project. The design shall be based on local and state standards and detailed enough for development and implementation.

Deliverables:

2.11.1 Early Development Project(s) Scope of Work
2.11.2 Early Development Project(s) Quarterly Status Reports