5228 INADALE

COUNTY OF LOS ANGELES
DEPARTMENT OF PUBLIC WORKS
BUILDING AND SAFETY / LAND DEVELOPMENT

LOMITA/LENNOX
24320 NARBONNE
LOMITA CA 90717
PHONE: (310) 534-3760 EXT:

1200

BUILDING PERMIT
RESIDENTIAL ADD
BL 1200 0509290024

LEGAL ID:
TR: 11533 LT: 11 BL: A

ASSESSOR INFORMATION NUMBER:
5010-007-024

TENANT:

OWNER: TEL. NO:
JACKSON,EDWARD D -
5228 INADALE AV
LOSA 900431537

APPLICANT: TEL. NO:
SAME AS OWNER -

CONTRACTOR: TEL. NO:
SAME AS OWNER -
LIC. NO

ARCHITECT OR ENGINEER: TEL. NO:
ALONZO A. CARMICHAEL (323) 295-7419-
5946 HAAS AVENUE LIC. NO:
LOS ANGELES, CA 90047 NONE

MAP NO:, SEWER MAP BOOK: PAGE: FIRE ZONE: CMP:
108-181 4 01

NO. OF FAMILIES: DWELLING UNITS: APT/COND: STAT CLASS:
NO 21

AIR QUALITY:	SCHOOL WITHIN 1000 FEET	HAZARDOUS MATERIALS
NO	NO	NO

REQUIRED SET BACK	YARD:	HWY:	TOTAL SETBACK FROM PROP LINE:	EXIST WIDTH:
FRONT PL-	22	2	22	60
SIDE PL-	5	0	5	0

	SQ. FT	NO. OF STORIES	CONST TYPE	NEW OCCUP GROUP
STRUCTURE:	1751	2	VN	R3
GARAGE:				
OTHER:				

EXIST BLDG USE: USE ZONE: R-1
EXIST OCC GRP:

BLDGS. NOW ON LOT: VALUATION:
145,000

FEES PAID

FEE DESCRIPTION:	QUANTITY:	UOM:	AMOUNT:
B1 PLANCHECK W/ENERGY	75000.00	VAL	817.18
AA BLDG PERMIT ISSUANCE			24.40
AC STRONG MOTION RESID	145000.00	VAL	14.50
B1 PLANCHECK W/ENERGY	145000.00	VAL	489.38
B2 PERMIT W/ENERGY	145000.00	VAL	1,537.14
08 CERTIF OF OCCUPANCY			88.90
	TOTAL FEES		2,971.50

REPORT ID: DPR261 ROUTE TO: BS1200

BUILDING ADDRESS:
5228 INADALE AV
LOSA CA 900431537
NEAREST CROSS STREET: ANGELUS VISTA
THOMAS PAGE: 673 GRID: D5 LOCALITY: LOS ANGELES

ISSUED ON:	PROCESSED BY:	EXPIRES ON:
07/11/06	RB	07/06/07

FINAL DATE FINAL BY: CODE:

DESCRIPTION OF WORK
2ND STORY ADDITION OF MSTR BDRM/BATHRM,BALCONY,REC RM W/DECK BATHRM/3/4 BATH,NURSERY;EXTEND KITCHEN & ENTRY

SPECIAL CONDITIONS:
RPPT 2004-00019

APPROVALS	DATE	INSPECTOR SIGNATURE
LOCATION AND SETBACKS		
SOILS ENGINEER APPROVAL		
FOUNDATION/TRENCH FORMS		
SLAB/UNDER FLOOR		
RAISED FLOOR FRAMING		
UNDERFLOOR INSULATION		
1ST LEVEL FLOOR SHEATH		
2ND LEVEL FLOOR SHEATH		
ROOF SHEATHING	6/12/07	WCHATMAN
FIRE DEPT. FRAME INSPECT		
BLDG DEPT. FRAME INSPECT	6/26/07	[illegible]
SHEAR PANELS		
INSULATION/WEATHER STRIP	DW/WC	6/27/07 DW/WC
INTERIOR LATH/DRYWALL	7/3/07	WCHATMAN
EXTERIOR LATH	7/13/07	WCHATMAN
LOT DRAINAGE		
SMOKE DETECTION DEVICES		
FIRE DEPARTMENT APPROVAL		

LICENSED CONTRACTOR'S DECLARATION

I hereby affirm under penalty of perjury that I am licensed under provisions of Chapter 9 (commencing with Section 7000) of Division 3 of the Business and Professions Code, and my license is in full force and effect.

License Class _____ Lic. No. _____

_____ _____
Contractor's Signature Date

OWNER-BUILDER DECLARATION

I hereby affirm under penalty of perjury that I am exempt from the Contractors License Law for the following reason (Sec. 7031.5, Business and Professions Code: Any city or county which requires a permit to construct, alter, improve, demolish, or repair any structure, prior to its issuance, also requires the applicant for such permit to file a signed statement that he or she is licensed pursuant to the provisions of the Contractors License Law (Chapter 9 (commencing with Section 7000) of Division 3 of the Business and Professions Code) or that he or she is exempt therefrom and the basis for the alleged exemption. Any violation of Section 7031.5 by any applicant for a permit subjects the applicant to a civil penalty of not more than five hundred dollars ($500).):

☐ I am exempt under Sec. _____ , B.& P.C. for this reason:

_____

_____

[Electrical, Plumbing & Sewer Permits Only]

☐ I, as owner of the property, will do the work, and the structure is not intended or offered for sale (Sec. 7044, Business and Professions Code: The Contractors License Law does not apply to an owner of property who builds or improves thereon, and who does such work himself or herself, provided that such improvements are not intended or offered for sale. If, however, the building or improvement is sold within one year of completion, the owner-builder will have the burden of proving that he or she did not build or improve for the purpose of sale.).

[All Other Permits]

☐ I, as owner of the property, or my employees with wages as their sole compensation, will do the work, and the structure is not intended or offered for sale (Sec. 7044, Business and Professions Code: The Contractors License Law does not apply to an owner of property who builds or improves thereon, and who does such work himself or herself or through his or her own employees, provided that such improvements are not intended or offered for sale. If, however, the building or improvement is sold within one year of completion, the owner-builder will have the burden of proving that he or she did not build or improve for the purpose of sale.).

☐ I, as owner of the property, am exclusively contracting with licensed contractors to construct the project (Sec. 7044, Business and Professions Code: The Contractors License Law does not apply to an owner of property who builds or improves thereon, and who contracts for such projects with a contractor(s) licensed pursuant to the Contractors License Law.).

X Alonzo G. Carmichael
Owner Signature Date

WORKER'S COMPENSATION DECLARATION

I hereby affirm under penalty of perjury one of the following declarations:

☐ I have and will maintain a certificate of consent to self-insure for worker's compensation, as provided for by Section 3700 of the Labor Code, for the performance of the work for which this permit is issued.

☐ I have and will maintain worker's compensation insurance, as required by Section 3700 of the Labor Code, for the performance of the work for which this permit is issued. My worker's compensation insurance carrier and policy number are:

Carrier _____

Policy Number _____

☐ I certify that in the performance of the work for which this permit is issued, I shall not employ any person in any manner so as to become subject to the worker's compensation laws of California, and agree that if I should become subject to the worker's compensation provisions of Section 3700 of the Labor Code, I shall forthwith comply with those provisions.

X Alonzo G. Carmichael
Applicant Signature Date

WARNING: FAILURE TO SECURE WORKER'S COMPENSATION COVERAGE IS UNLAWFUL, AND SHALL SUBJECT AN EMPLOYER TO CRIMINAL PENALTIES AND CIVIL FINES UP TO ONE HUNDRED THOUSAND DOLLARS ($100,000), IN ADDITION TO THE COST OF COMPENSATION, DAMAGES AS PROVIDED FOR IN SECTION 3706 OF THE LABOR CODE, INTEREST, AND ATTORNEY'S FEES.

LOBBYIST ORDINANCE CERTIFICATION

[Complete this section for permits in unincorporated Los Angeles County only]

This is to certify that I, as permit applicant, am familiar with the requirements of Los Angeles County Code Chapter 2.160 et seq., (relating to the Los Angeles County Lobbyist Ordinance) and that all persons acting on behalf of myself complied and will continue to comply therewith through the application process.

_____ _____
Applicant (Print Name) Applicant Signature

_____ _____
Company Name (if employed by an entity/agency) Date

JOB ADDRESS
LOCALITY

HAZARDOUS MATERIAL DECLARATION

Will the applicant or future building occupant handle a hazardous material or a mixture containing a hazardous material equal to or greater than the amount specified on the hazardous materials information guide?

Yes ☐ No ☐

Will the intended use of the building by the applicant or future building occupant require a permit for construction or modification from the South Coast Air Quality Management District (SCAQMD)? See permitting checklist for guidelines.

Yes ☐ No ☐

I have read the hazardous materials information guide and the SCAQMD permitting checklist, I understand my requirements under the Los Angeles County Code Title 2, Chapter 220 Sections 220.100 through 220.140 concerning hazardous material reporting and for obtaining a permit from the SCAQMD.

ASBESTOS NOTIFICATION

☐ Notification letter sent to SCAQMD or EPA

☐ I declare that notification of asbestos removal is not applicable to addressed project.

CONSTRUCTION LENDING AGENCY

I hereby affirm under penalty of perjury that there is a construction lending agency for the performance of the work for which this permit is issued (Sec. 3097, Civ.C.).

Lender's Name _____

Lender's Address _____

I certify that I have read this application and state under the penalty of perjury that the above information is correct. I agree to comply with all City and County ordinances and State laws relating to building construction, and hereby authorize representatives of this County to enter upon the above-mentioned property for inspection purposes.

X Alonzo G. Carmichael
Applicant or Agent Signature **Date** 7/11/06

COUNTY OF LOS ANGELES
DEPARTMENT OF PUBLIC WORKS
BUILDING AND SAFETY / LAND DEVELOPMENT

LOMITA/LENNOX # 1200
24320 NARBONNE
LOMITA CA 90717
PHONE: (310) 534-3760 EXT:

BUILDING PERMIT
RETAINING WALL
BL 1200 0509290031

LEGAL ID:
TR: 11533 LT: 11 BL: A

ASSESSOR INFORMATION NUMBER:
5010-007-024

TENANT:

OWNER: TEL. NO:
JACKSON,EDWARD D -
5228 INADALE AV
LOSA 900431537

APPLICANT: TEL. NO:
SAME AS OWNER -

CONTRACTOR: TEL. NO:
SAME AS OWNER -
LIC. NO

ARCHITECT OR ENGINEER: TEL. NO:
ALONZO A. CARMICHAEL (323) 295-7419-
5946 HAAS AVENUE LIC. NO:
LOS ANGELES, CA 90047 NONE

MAP NO: SEWER MAP BOOK: PAGE: FIRE ZONE: CMP:
108-181 00

NO. OF FAMILIES: DWELLING UNITS: APT/COND: STAT CLASS:
NO 20

AIR QUALITY:	SCHOOL WITHIN 1000 FEET	HAZARDOUS MATERIALS
NO	NO	NO

TOTAL HEIGHT: 5 FT
RETAINING HEIGHT: 5 FT
WALL LENGTH: 24 FT

EXIST BLDG USE: USE ZONE: R-1
EXIST OCC GRP:

BLDGS. NOW ON LOT: VALUATION:
2,000

FEES PAID

FEE DESCRIPTION:	QUANTITY:	UOM:	AMOUNT:
D1 PLANCHECK W/O EN-HC	2000.00	VAL	70.55
AA BLDG PERMIT ISSUANCE			24.40
AC STRONG MOTION RESID	2000.00	VAL	0.50
D2 PERMIT W/O EN-HC	2000.00	VAL	72.10
	TOTAL FEES		167.55

REPORT ID: DPR261 ROUTE TO: BS1200

BUILDING ADDRESS:
5228 INADALE AV
LOSA CA 900431537
NEAREST CROSS STREET: ANGELUS VISTA
THOMAS PAGE: 673 GRID: D5 LOCALITY: LOS ANGELES

ISSUED ON:	PROCESSED BY:	EXPIRES ON:
07/11/06	RB	07/06/07

FINAL DATE	FINAL BY:	CODE:

DESCRIPTION OF WORK
RETAINING WALL 23'X 3"LONG 5'HEIGHT.

SPECIAL CONDITIONS:

APPROVALS	DATE	INSPECTOR SIGNATURE
LOCATION AND SETBACKS		
SOILS ENGINEER APPROVAL		
FOUND/TRENCH FORMS		
FORMS/GROUT LIFT		
2ND GROUT LIFT		
3RD GROUT LIFT		
WALL DRAIN		
BACKFILL COMPACTION		
SURFACE DRAINAGE		

LICENSED CONTRACTOR'S DECLARATION

I hereby affirm under penalty of perjury that I am licensed under provisions of Chapter 9 (commencing with Section 7000) of Division 3 of the Business and Professions Code, and my license is in full force and effect.

License Class _____ Lic. No. _____

Contractor's Signature _____ Date _____

OWNER-BUILDER DECLARATION

I hereby affirm under penalty of perjury that I am exempt from the Contractors License Law for the following reason (Sec. 7031.5, Business and Professions Code: Any city or county which requires a permit to construct, alter, improve, demolish, or repair any structure, prior to its issuance, also requires the applicant for such permit to file a signed statement that he or she is licensed pursuant to the provisions of the Contractors License Law (Chapter 9 (commencing with Section 7000) of Division 3 of the Business and Professions Code) or that he or she is exempt therefrom and the basis for the alleged exemption. Any violation of Section 7031.5 by any applicant for a permit subjects the applicant to a civil penalty of not more than five hundred dollars ($500).):

☐ I am exempt under Sec. _____ , B.& P.C. for this reason:

_____

_____

[Electrical, Plumbing & Sewer Permits Only]

☐ I, as owner of the property, will do the work, and the structure is not intended or offered for sale (Sec. 7044, Business and Professions Code: The Contractors License Law does not apply to an owner of property who builds or improves thereon, and who does such work himself or herself, provided that such improvements are not intended or offered for sale. If, however, the building or improvement is sold within one year of completion, the owner-builder will have the burden of proving that he or she did not build or improve for the purpose of sale.).

[All Other Permits]

☐ I, as owner of the property, or my employees with wages as their sole compensation, will do the work, and the structure is not intended or offered for sale (Sec. 7044, Business and Professions Code: The Contractors License Law does not apply to an owner of property who builds or improves thereon, and who does such work himself or herself or through his or her own employees, provided that such improvements are not intended or offered for sale. If, however, the building or improvement is sold within one year of completion, the owner-builder will have the burden of proving that he or she did not build or improve for the purpose of sale.).

☐ I, as owner of the property, am exclusively contracting with licensed contractors to construct the project (Sec. 7044, Business and Professions Code: The Contractors License Law does not apply to an owner of property who builds or improves thereon, and who contracts for such projects with a contractor(s) licensed pursuant to the Contractors License Law.).

X Alberto G. Carmichael 7/11/06

Owner Signature Date

WORKER'S COMPENSATION DECLARATION

I hereby affirm under penalty of perjury one of the following declarations:

☐ I have and will maintain a certificate of consent to self-insure for worker's compensation, as provided for by Section 3700 of the Labor Code, for the performance of the work for which this permit is issued.

☐ I have and will maintain worker's compensation insurance, as required by Section 3700 of the Labor Code, for the performance of the work for which this permit is issued. My worker's compensation insurance carrier and policy number are:

Carrier _____

Policy Number _____

☐ I certify that in the performance of the work for which this permit is issued, I shall not employ any person in any manner so as to become subject to the worker's compensation laws of California, and agree that if I should become subject to the worker's compensation provisions of Section 3700 of the Labor Code, I shall forthwith comply with those provisions.

X Alberto G. Carmichael 7/11/06

Applicant Signature Date

WARNING: FAILURE TO SECURE WORKER'S COMPENSATION COVERAGE IS UNLAWFUL, AND SHALL SUBJECT AN EMPLOYER TO CRIMINAL PENALTIES AND CIVIL FINES UP TO ONE HUNDRED THOUSAND DOLLARS ($100,000), IN addition TO THE COST OF COMPENSATION, DAMAGES AS PROVIDED FOR IN SECTION 3706 OF THE LABOR CODE, INTEREST, AND ATTORNEY'S FEES.

LOBBYIST ORDINANCE CERTIFICATION

[Complete this section for permits in unincorporated Los Angeles County only]

This is to certify that I, as permit applicant, am familiar with the requirements of Los Angeles County Code Chapter 2.160 et seq., (relating to the Los Angeles County Lobbyist Ordinance) and that all persons acting on behalf of myself complied and will continue to comply therewith through the application process.

Applicant (Print Name) _____ Applicant Signature _____

Company Name (if employed by an entity/agency) _____ Date _____

JOB ADDRESS
LOCALITY

HAZARDOUS MATERIAL DECLARATION

Will the applicant or future building occupant handle a hazardous material or a mixture containing a hazardous material equal to or greater than the amount specified on the hazardous materials information guide?

Yes ☐ No ☐

Will the intended use of the building by the applicant or future building occupant require a permit for construction or modification from the South Coast Air Quality Management District (SCAQMD)? See permitting checklist for guidelines.

Yes ☐ No ☐

I have read the hazardous materials information guide and the SCAQMD permitting checklist, I understand my requirements under the Los Angeles County Code Title 2, Chapter 220 Sections 220.100 through 220.140 concerning hazardous material reporting and for obtaining a permit from the SCAQMD.

ASBESTOS NOTIFICATION

☐ Notification letter sent to SCAQMD or EPA

☐ I declare that notification of asbestos removal is not applicable to addressed project.

CONSTRUCTION LENDING AGENCY

I hereby affirm under penalty of perjury that there is a construction lending agency for the performance of the work for which this permit is issued (Sec. 3097, Civ.C.).

Lender's Name _____

Lender's Address _____

I certify that I have read this application and state under the penalty of perjury that the above information is correct. I agree to comply with all City and County ordinances and State laws relating to building construction, and hereby authorize representatives of this County to enter upon the above-mentioned property for inspection purposes.

X Alberto G. Carmichael 7/11/06

Applicant or Agent Signature **Date**

COUNTY OF LOS ANGELES
DEPARTMENT OF PUBLIC WORKS
BUILDING AND SAFETY / LAND DEVELOPMENT

LOMITA/LENNOX # 1200
24320 NARBONNE
LOMITA CA 90717
PHONE: (310) 534-3760 EXT:

ELECTRICAL PERMIT
EL 1200 0607110004

LEGAL ID:
TR: 11533 LT: 11 BL: A

ASSESSOR INFORMATION NUMBER:
5010-007-024

TENANT:

OWNER: TEL. NO:
JACKSON,EDWARD D -
5228 INADALE AV
LOSA 900431537

APPLICANT: TEL. NO:
SAME AS OWNER -

CONTRACTOR: TEL. NO:
SAME AS OWNER -
LIC. NO

ARCHITECT OR ENGINEER: TEL. NO:
ALONZO A. CARMICHAEL (323) 295-7419-
5946 HAAS AVENUE LIC. NO:
LOS ANGELES, CA 90047 NONE

FEES PAID

FEE DESCRIPTION:	QUANTITY: UOM:	AMOUNT:
A1 PERMIT ISSUANCE FEE		24.40
G1 OUTLETS-LGT,SW,RECP	27.00 OUT	46.20
G2 LIGHTING FIXTURES	20.00 LGT	38.00
	TOTAL FEES	108.60

REPORT ID: DPR265 ROUTE TO: BS1200

BUILDING ADDRESS:
5228 INADALE AV
LOSA CA 900431537
NEAREST CROSS STREET: ANGELUS VISTA
THOMAS PAGE: 673 GRID: D5 LOCALITY: LOS ANGELES

ISSUED ON:	PROCESSED BY:	PLAN BY:	EXPIRES ON:
07/11/06	RB		01/07/07

FINAL DATE FINAL BY: CODE:

DESCRIPTION OF WORK
27 OUTLETS AND 20 LIGHTS

SPECIAL CONDITIONS:

APPROVALS	DATE	INSPECTOR SIGNATURE
TEMPORARY POWER POLE		
UNDERGROUND CONDUIT		
UFER GROUND		
ROUGH CONDUIT		
ROUGH WIRING	6/26/07	Wilk
MAIN WATER LINE PLASTIC Y/N METAL Y/N		
UTILITY COMPANY NOTIFIED		

LICENSED CONTRACTOR'S DECLARATION

I hereby affirm under penalty of perjury that I am licensed under provisions of Chapter 9 (commencing with Section 7000) of Division 3 of the Business and Professions Code, and my license is in full force and effect.

License Class _____ Lic. No. _____

_____ _____
Contractor's Signature Date

OWNER-BUILDER DECLARATION

I hereby affirm under penalty of perjury that I am exempt from the Contractors License Law for the following reason (Sec. 7031.5, Business and Professions Code: Any city or county which requires a permit to construct, alter, improve, demolish, or repair any structure, prior to its issuance, also requires the applicant for such permit to file a signed statement that he or she is licensed pursuant to the provisions of the Contractors License Law (Chapter 9 (commencing with Section 7000) of Division 3 of the Business and Professions Code) or that he or she is exempt therefrom and the basis for the alleged exemption. Any violation of Section 7031.5 by any applicant for a permit subjects the applicant to a civil penalty of not more than five hundred dollars ($500).):

☐ I am exempt under Sec. _____ , B.& P.C. for this reason:

_____

_____

[Electrical, Plumbing & Sewer Permits Only]

☐ I, as owner of the property, will do the work, and the structure is not intended or offered for sale (Sec. 7044, Business and Professions Code: The Contractors License Law does not apply to an owner of property who builds or improves thereon, and who does such work himself or herself, provided that such improvements are not intended or offered for sale. If, however, the building or improvement is sold within one year of completion, the owner-builder will have the burden of proving that he or she did not build or improve for the purpose of sale.).

[All Other Permits]

☐ I, as owner of the property, or my employees with wages as their sole compensation, will do the work, and the structure is not intended or offered for sale (Sec. 7044, Business and Professions Code: The Contractors License Law does not apply to an owner of property who builds or improves thereon, and who does such work himself or herself or through his or her own employees, provided that such improvements are not intended or offered for sale. If, however, the building or improvement is sold within one year of completion, the owner-builder will have the burden of proving that he or she did not build or improve for the purpose of sale.).

☐ I, as owner of the property, am exclusively contracting with licensed contractors to construct the project (Sec. 7044, Business and Professions Code: The Contractors License Law does not apply to an owner of property who builds or improves thereon, and who contracts for such projects with a contractor(s) licensed pursuant to the Contractors License Law.).

Lorenzo A. Carmichael 7/11/06
Owner Signature Date

WORKER'S COMPENSATION DECLARATION

I hereby affirm under penalty of perjury one of the following declarations:

☐ I have and will maintain a certificate of consent to self-insure for worker's compensation, as provided for by Section 3700 of the Labor Code, for the performance of the work for which this permit is issued.

☐ I have and will maintain worker's compensation insurance, as required by Section 3700 of the Labor Code, for the performance of the work for which this permit is issued. My worker's compensation insurance carrier and policy number are:

Carrier _____

Policy Number _____

☐ I certify that in the performance of the work for which this permit is issued, I shall not employ any person in any manner so as to become subject to the worker's compensation laws of California, and agree that if I should become subject to the worker's compensation provisions of Section 3700 of the Labor Code, I shall forthwith comply with those provisions.

Lorenzo A. Carmichael
Applicant Signature Date 7/11/06

WARNING: FAILURE TO SECURE WORKER'S COMPENSATION COVERAGE IS UNLAWFUL, AND SHALL SUBJECT AN EMPLOYER TO CRIMINAL PENALTIES AND CIVIL FINES UP TO ONE HUNDRED THOUSAND DOLLARS ($100,000), IN ADDITION TO THE COST OF COMPENSATION, DAMAGES AS PROVIDED FOR IN SECTION 3706 OF THE LABOR CODE, INTEREST, AND ATTORNEY'S FEES.

LOBBYIST ORDINANCE CERTIFICATION

[Complete this section for permits in unincorporated Los Angeles County only]

This is to certify that I, as permit applicant, am familiar with the requirements of Los Angeles County Code Chapter 2.160 et seq., (relating to the Los Angeles County Lobbyist Ordinance) and that all persons acting on behalf of myself complied and will continue to comply therewith through the application process.

_____ _____
Applicant (Print Name) Applicant Signature

_____ _____
Company Name (if employed by an entity/agency) Date

JOB ADDRESS
LOCALITY

HAZARDOUS MATERIAL DECLARATION

Will the applicant or future building occupant handle a hazardous material or a mixture containing a hazardous material equal to or greater than the amount specified on the hazardous materials information guide?

Yes ☐ No ☐

Will the intended use of the building by the applicant or future building occupant require a permit for construction or modification from the South Coast Air Quality Management District (SCAQMD)? See permitting checklist for guidelines.

Yes ☐ No ☐

I have read the hazardous materials information guide and the SCAQMD permitting checklist, I understand my requirements under the Los Angeles County Code Title 2, Chapter 220 Sections 220.100 through 220.140 concerning hazardous material reporting and for obtaining a permit from the SCAQMD.

ASBESTOS NOTIFICATION

☐ Notification letter sent to SCAQMD or EPA

☐ I declare that notification of asbestos removal is not applicable to addressed project.

CONSTRUCTION LENDING AGENCY

I hereby affirm under penalty of perjury that there is a construction lending agency for the performance of the work for which this permit is issued (Sec. 3097, Civ.C.).

Lender's Name _____

Lender's Address _____

I certify that I have read this application and state under the penalty of perjury that the above information is correct. I agree to comply with all City and County ordinances and State laws relating to building construction, and hereby authorize representatives of this County to enter upon the above-mentioned property for inspection purposes.

Lorenzo A. Carmichael 7/11/06
Applicant or Agent Signature **Date**

COUNTY OF LOS ANGELES
DEPARTMENT OF PUBLIC WORKS
BUILDING AND SAFETY / LAND DEVELOPMENT

LOMITA/LENNOX # 1200
24320 NARBONNE
LOMITA CA 90717
PHONE: (310) 534-3760 EXT:

PLUMBING PERMIT
PL 1200 0607110001

LEGAL ID:
TR: 11533 LT: 11 BL: A

ASSESSOR INFORMATION NUMBER:
5010-007-024

TENANT:

OWNER: TEL. NO:
JACKSON,EDWARD D -
5228 INADALE AV
LOSA 900431537

APPLICANT: TEL. NO:
SAME AS OWNER -

CONTRACTOR: TEL. NO:
SAME AS OWNER -
LIC. NO

ARCHITECT OR ENGINEER: TEL. NO:
ALONZO A. CARMICHAEL (323) 295-7419-
5946 HAÃS AVENUE LIC. NO:
LOS ANGELES, CA 90047 NONE

FEES PAID

FEE DESCRIPTION:	QUANTITY:	UOM:	AMOUNT:
01 PERMIT ISSUANCE FEE			24.40
07 BATHTUBS/SHOWERS	3.00	FIX	42.60
25 LAVATORIES / SINKS	3.00	FIX	42.60
45 WATER CLOSET/URINAL	3.00	FIX	42.60
TOTAL FEES			152.20

REPORT ID: DPR263 ROUTE TO: BS1200

BUILDING ADDRESS:
5228 INADALE AV
LOSA CA 900431537
NEAREST CROSS STREET: ANGELUS VISTA
THOMAS PAGE: 673 GRID: D5 LOCALITY: LOS ANGELES

ISSUED ON:	PROCESSED BY:	PLAN BY:	EXPIRES ON:
07/11/06	RB		01/07/07

FINAL DATE FINAL BY: CODE:

DESCRIPTION OF WORK
3 TOILETS, 3 SINKS AND 3 BATHTUB/SHOWERS

SPECIAL CONDITIONS:

APPROVALS	DATE	INSPECTOR SIGNATURE
UNDER SLAB WORK	6/26/07	[illegible]
WATER SERVICE PLASTIC Y/N METAL Y/N		
ROUGH PLUMBING		
GAS PIPING	6/26/07	[illegible]
GAS VENT		
HOT WATER HEATER		
PLUMBING FIXTURES		
LAWN SPRINKLERS		
GAS TEST		
UTILITY COMPANY NOTIFIED		
CWV		
GRAY WATER SYSTEM		

LICENSED CONTRACTOR'S DECLARATION

I hereby affirm under penalty of perjury that I am licensed under provisions of Chapter 9 (commencing with Section 7000) of Division 3 of the Business and Professions Code, and my license is in full force and effect.

License Class _____ Lic. No. _____

Contractor's Signature _____ Date _____

OWNER-BUILDER DECLARATION

I hereby affirm under penalty of perjury that I am exempt from the Contractors License Law for the following reason (Sec. 7031.5, Business and Professions Code: Any city or county which requires a permit to construct, alter, improve, demolish, or repair any structure, prior to its issuance, also requires the applicant for such permit to file a signed statement that he or she is licensed pursuant to the provisions of the Contractors License Law (Chapter 9 (commencing with Section 7000) of Division 3 of the Business and Professions Code) or that he or she is exempt therefrom and the basis for the alleged exemption. Any violation of Section 7031.5 by any applicant for a permit subjects the applicant to a civil penalty of not more than five hundred dollars ($500).):

☐ I am exempt under Sec. _____ , B.& P.C. for this reason:

_____

_____

[Electrical, Plumbing & Sewer Permits Only]

☐ I, as owner of the property, will do the work, and the structure is not intended or offered for sale (Sec. 7044, Business and Professions Code: The Contractors License Law does not apply to an owner of property who builds or improves thereon, and who does such work himself or herself, provided that such improvements are not intended or offered for sale. If, however, the building or improvement is sold within one year of completion, the owner-builder will have the burden of proving that he or she did not build or improve for the purpose of sale.).

[All Other Permits]

☐ I, as owner of the property, or my employees with wages as their sole compensation, will do the work, and the structure is not intended or offered for sale (Sec. 7044, Business and Professions Code: The Contractors License Law does not apply to an owner of property who builds or improves thereon, and who does such work himself or herself or through his or her own employees, provided that such improvements are not intended or offered for sale. If, however, the building or improvement is sold within one year of completion, the owner-builder will have the burden of proving that he or she did not build or improve for the purpose of sale.).

☐ I, as owner of the property, am exclusively contracting with licensed contractors to construct the project (Sec. 7044, Business and Professions Code: The Contractors License Law does not apply to an owner of property who builds or improves thereon, and who contracts for such projects with a contractor(s) licensed pursuant to the Contractors License Law.).

Owner Signature _____ Date _____

WORKER'S COMPENSATION DECLARATION

I hereby affirm under penalty of perjury one of the following declarations:

☐ I have and will maintain a certificate of consent to self-insure for worker's compensation, as provided for by Section 3700 of the Labor Code, for the performance of the work for which this permit is issued.

☐ I have and will maintain worker's compensation insurance, as required by Section 3700 of the Labor Code, for the performance of the work for which this permit is issued. My worker's compensation insurance carrier and policy number are:

Carrier _____

Policy Number _____

☐ I certify that in the performance of the work for which this permit is issued, I shall not employ any person in any manner so as to become subject to the worker's compensation laws of California, and agree that if I should become subject to the worker's compensation provisions of Section 3700 of the Labor Code, I shall forthwith comply with those provisions.

Applicant Signature _____ Date _____

WARNING: FAILURE TO SECURE WORKER'S COMPENSATION COVERAGE IS UNLAWFUL, AND SHALL SUBJECT AN EMPLOYER TO CRIMINAL PENALTIES AND CIVIL FINES UP TO ONE HUNDRED THOUSAND DOLLARS ($100,000), IN ADDITION TO THE COST OF COMPENSATION, DAMAGES AS PROVIDED FOR IN SECTION 3706 OF THE LABOR CODE, INTEREST, AND ATTORNEY'S FEES.

LOBBYIST ORDINANCE CERTIFICATION

[Complete this section for permits in unincorporated Los Angeles County only]

This is to certify that I, as permit applicant, am familiar with the requirements of Los Angeles County Code Chapter 2.160 et seq., (relating to the Los Angeles County Lobbyist Ordinance) and that all persons acting on behalf of myself complied and will continue to comply therewith through the application process.

Applicant (Print Name) _____ Applicant Signature _____

Company Name (if employed by an entity/agency) _____ Date _____

JOB ADDRESS
LOCALITY

HAZARDOUS MATERIAL DECLARATION

Will the applicant or future building occupant handle a hazardous material or a mixture containing a hazardous material equal to or greater than the amount specified on the hazardous materials information guide?

Yes ☐ No ☐

Will the intended use of the building by the applicant or future building occupant require a permit for construction or modification from the South Coast Air Quality Management District (SCAQMD)? See permitting checklist for guidelines.

Yes ☐ No ☐

I have read the hazardous materials information guide and the SCAQMD permitting checklist, I understand my requirements under the Los Angeles County Code Title 2, Chapter 220 Sections 220.100 through 220.140 concerning hazardous material reporting and for obtaining a permit from the SCAQMD.

ASBESTOS NOTIFICATION

☐ Notification letter sent to SCAQMD or EPA

☐ I declare that notification of asbestos removal is not applicable to addressed project.

CONSTRUCTION LENDING AGENCY

I hereby affirm under penalty of perjury that there is a construction lending agency for the performance of the work for which this permit is issued (Sec. 3097, Civ.C.).

Lender's Name _____

Lender's Address _____

I certify that I have read this application and state under the penalty of perjury that the above information is correct. I agree to comply with all City and County ordinances and State laws relating to building construction, and hereby authorize representatives of this County to enter upon the above-mentioned property for inspection purposes.

Applicant or Agent Signature _____ **Date** 7/4/06

Los Angeles County
Department of Public Works
7807 South Compton Avenue
Building Division
Los Angeles, CA 90001

to Whom It May Concern:

This letter authorizes my Architect, Mr. Alonzo A. Carmichael (C-16450), to sign Building Permit Applications and any required Building Department documents for me.

Thank you for your cooperation.

Edward David Jenkins

NAME

5228 INADALE AVE

ADDRESS

LOS ANGELES, CA 90043

11/6/05

Date

County of Los Angeles

DEPARTMENT OF PUBLIC WORKS BUILDING & SAFETY DIVISION

Field Office Address:

LARUCP

STRUCTURAL OBSERVATION REPORT FORM

***STRUCTURAL OBSERVATION** means the visual observation of the structural system, for general conformance to the approved plans and specifications, at significant construction stages and at completion of the structural system. Structural observation does not include or waive the responsibility for the inspections required by Sections 108, 1701 or other sections of the Los Angeles County Building Code.(Sections 106.4.5, 1702)*

Report No. 1

This report includes all construction work through 27 day of March, 2007 Page No. 1 of 1

Project Address: 5228 Inadale Ave		Structural Observer of Record (SOR): Alonzo A. Carmichael	SOR Phone No.:
Building Permit No.: 0509 29 0031	Structural Observation performed by: Alonzo A. Carmichael	Observer Professional Lic./Reg. No.: C-16450	Observer Phone No.: (323) 295-7419

0509 29 0024 OBSERVED STRUCTURAL ELEMENTS AND THEIR CONNECTIONS

FOUNDATION	WALL	FRAMES	FLOOR	PORTION OBSERVED, IF NOT WHOLE
☑ Footing, Stem Walls,	☐ Concrete	☐ Steel Moment Frame	☐ Concrete	
☐ Mat Foundation	☐ Masonry	☐ Steel Braced Frame	☐ Steel Deck	
☐ Caisson, Piles, Grade Beams	☐ Wood	☐ Concrete Moment Frame	☐ Wood	
☑ Retaining Foundation Hillside Special Anchors	☐ Other:	☐ Masonry Wall Frame	☐ Others:	
☐ Others:		☐ Others:		

NOTES: Footing reinforcing for retaining wall and kitchen addition and east side addition are correct and ready to pour concrete. Also dowells with SIMPSON SET 22 as done and inspected are OK. Retaining wall reinforcing is OK. it can be pour

OBSERVED DEFICIENCIES: NONE

I DECLARE THAT THE FOLLOWING STATEMENTS ARE TRUE TO THE BEST OF MY KNOWLEDGE:

1. I AM THE ENGINEER OR ARCHITECT RETAINED BY THE OWNER TO BE IN RESPONSIBLE CHARGE FOR THE STRUCTURAL OBSERVATION IN ACCORDANCE WITH THE REQUIREMENTS OF THE CITY/COUNTY OF Los Angeles.
2. I, OR ANOTHER ENGINEER OR ARCHITECT WHO I HAVE DESIGNATED ABOVE AND IS UNDER MY RESPONSIBLE CHARGE, HAS PERFORMED THE REQUIRED SITE VISITS AT EACH SIGNIFICANT CONSTRUCTION STAGE TO VERIFY IF THE STRUCTURE IS IN GENERAL CONFORMANCE WITH APPROVED PLANS AND SPECIFICATIONS;
3. ALL DEFICIENCIES WHICH REMAIN TO BE CORRECTED HAVE BEEN INDICATED ABOVE;
4. I RECOMMEND THAT ACCEPTANCE OF THE STRUCTURAL SYSTEMS BY THE CITY/COUNTY OF _____ BE WITHHELD UNTIL ALL OBSERVED DEFICIENCIES ARE CORRECTED.

LICENSED ARCHITECT ALONZO A. CARMICHAEL No. C-16450 Exp. 10/31/07 STATE OF CALIFORNIA

Alonzo A. Carmichael — March 27, 2007

SIGNATURE — DATE

A. Carmichael

STAMP OF STRUCTURAL OBSERVER OF RECORD

County of Los Angeles

DEPARTMENT OF PUBLIC WORKS BUILDING & SAFETY DIVISION

Field Office Address:

LARUCP

STRUCTURAL OBSERVATION REPORT FORM

STRUCTURAL OBSERVATION means the visual observation of the structural system, for general conformance to the approved plans and specifications, at significant construction stages and at completion of the structural system. Structural observation does not include or waive the responsibility for the inspections required by Sections 108, 1701 or other sections of the Los Angeles County Building Code.(Sections 106.4.5, 1702)

Report No. 2

This report includes all construction work through 11 day of April, 2007 Page No. 1 of 2

Project Address: 5228 Inadale Ave		Structural Observer of Record (SOR): Alonzo A. Carmichael	SOR Phone No.: 323 295-7419
Building Permit No.: 0509 29 0024	Structural Observation performed by: Alonzo A. Carmichael	Observer Professional Lic/Reg. No.: C-16450	Observer Phone No.: Same

OBSERVED STRUCTURAL ELEMENTS AND THEIR CONNECTIONS

FOUNDATION	WALL	FRAMES	FLOOR	PORTION OBSERVED, IF NOT WHOLE
☐ Footing, Stem Walls,	☐ Concrete	☐ Steel Moment Frame	☐ Concrete	
☐ Mat Foundation	☐ Masonry	☐ Steel Braced Frame	☐ Steel Deck	
☐ Caisson, Piles, Grade Beams	☐ Wood	☐ Concrete Moment Frame	☐ Wood	
☐ Retaining Foundation Hillside Special Anchors	☐ Other:	☐ Masonry Wall Frame	☐ Others:	
☑ Others: Concrete pads		☐ Others:		

NOTES: see attached sheet.

OBSERVED DEFICIENCIES: NONE

I DECLARE THAT THE FOLLOWING STATEMENTS ARE TRUE TO THE BEST OF MY KNOWLEDGE:

1. I AM THE ENGINEER OR ARCHITECT RETAINED BY THE OWNER TO BE IN RESPONSIBLE CHARGE FOR THE STRUCTURAL OBSERVATION IN ACCORDANCE WITH THE REQUIREMENTS OF THE CITY/COUNTY OF Los Angeles.
2. I, OR ANOTHER ENGINEER OR ARCHITECT WHO I HAVE DESIGNATED ABOVE AND IS UNDER MY RESPONSIBLE CHARGE, HAS PERFORMED THE REQUIRED SITE VISITS AT EACH SIGNIFICANT CONSTRUCTION STAGE TO VERIFY IF THE STRUCTURE IS IN GENERAL CONFORMANCE WITH APPROVED PLANS AND SPECIFICATIONS;
3. ALL DEFICIENCIES WHICH REMAIN TO BE CORRECTED HAVE BEEN INDICATED ABOVE;
4. I RECOMMEND THAT ACCEPTANCE OF THE STRUCTURAL SYSTEMS BY THE CITY/COUNTY OF _____ BE WITHHELD UNTIL ALL OBSERVED DEFICIENCIES ARE CORRECTED.

Alonzo A. Carmichael — SIGNATURE

April 11, 2007 — DATE

LICENSED ARCHITECT ALONZO A. CARMICHAEL No. C-16450 Exp. 10/31/07 STATE OF CALIFORNIA

STAMP OF STRUCTURAL OBSERVER OF RECORD

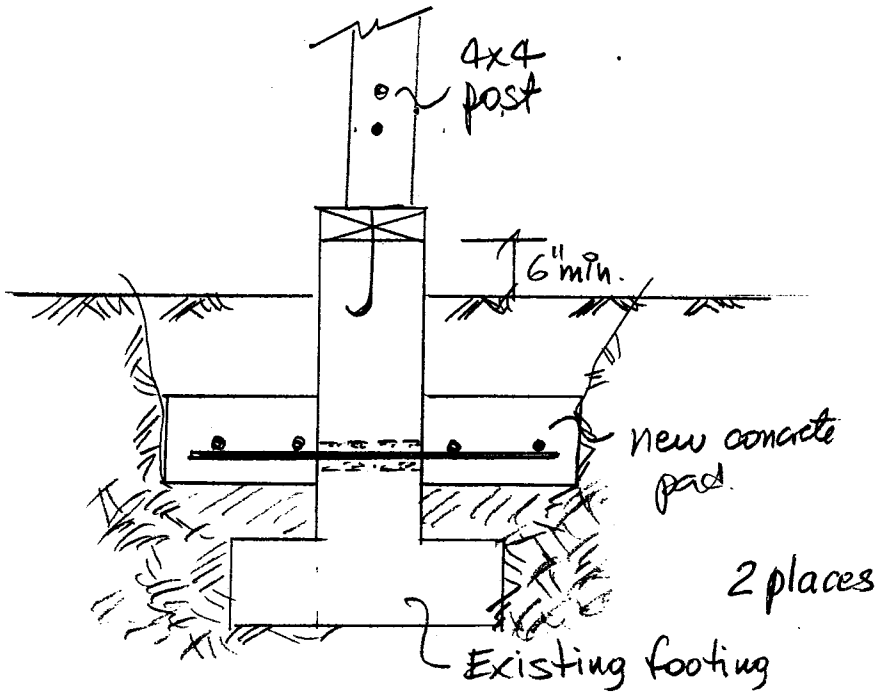

The concrete peds as Shown on detail above are O.K for bearing load coming from 4x4 post. The reinforsment crosses through the existing footing and therefore there is no need for any expoxy never theless the Contractor did it, therefore there is no need for Deputy Inspector.

Alonzo A. Carmichael
Signature

April 11, 2007
Date

LICENSED ARCHITECT
ALONZO A. CARMICHAEL
No. C-16450
Exp. 10/31/07
STATE OF CALIFORNIA

AA Carmichael

stamp of Structural observer of Record

County of Los Angeles

DEPARTMENT OF PUBLIC WORKS BUILDING & SAFETY DIVISION

Field Office Address:

STRUCTURAL OBSERVATION REPORT FORM

STRUCTURAL OBSERVATION means the visual observation of the structural system, for general conformance to the approved plans and specifications, at significant construction stages and at completion of the structural system. Structural observation does not include or waive the responsibility for the inspections required by Sections 108, 1701 or other sections of the Los Angeles County Building Code.(Sections 106.4.5, 1702)

Report No. 3

This report includes all construction work through 25 day of April, 2007 Page No. 1 of 2

Project Address: 5228 Inadale Ave		Structural Observer of Record (SOR): Alonzo A. Carmichael	SOR Phone No.: 323-295-7419
Building Permit No.: 0509 29 0024	Structural Observation performed by: Alonzo A. Carmichael	Observer Professional Lic./Reg. No.: C-16450	Observer Phone No.: Same

OBSERVED STRUCTURAL ELEMENTS AND THEIR CONNECTIONS

FOUNDATION	WALL	FRAMES	FLOOR	PORTION OBSERVED, IF NOT WHOLE
☐ Footing, Stem Walls,	☐ Concrete	☐ Steel Moment Frame	☐ Concrete	
☐ Mat Foundation	☐ Masonry	☐ Steel Braced Frame	☐ Steel Deck	
☐ Caisson, Piles, Grade Beams	☐ Wood	☐ Concrete Moment Frame	☐ Wood	
☐ Retaining Foundation Hillside Special Anchors	☐ Other:	☐ Masonry Wall Frame	☐ Others:	
☑ Others: Holdowns		☐ Others:		

NOTES: Please see attached sheet.

OBSERVED DEFICIENCIES: NONE

I DECLARE THAT THE FOLLOWING STATEMENTS ARE TRUE TO THE BEST OF MY KNOWLEDGE:

1. I AM THE ENGINEER OR ARCHITECT RETAINED BY THE OWNER TO BE IN RESPONSIBLE CHARGE FOR THE STRUCTURAL OBSERVATION IN ACCORDANCE WITH THE REQUIREMENTS OF THE CITY/COUNTY OF Los Angeles.
2. I, OR ANOTHER ENGINEER OR ARCHITECT WHO I HAVE DESIGNATED ABOVE AND IS UNDER MY RESPONSIBLE CHARGE, HAS PERFORMED THE REQUIRED SITE VISITS AT EACH SIGNIFICANT CONSTRUCTION STAGE TO VERIFY IF THE STRUCTURE IS IN GENERAL CONFORMANCE WITH APPROVED PLANS AND SPECIFICATIONS;
3. ALL DEFICIENCIES WHICH REMAIN TO BE CORRECTED HAVE BEEN INDICATED ABOVE;
4. I RECOMMEND THAT ACCEPTANCE OF THE STRUCTURAL SYSTEMS BY THE CITY/COUNTY OF _____ BE WITHHELD UNTIL ALL OBSERVED DEFICIENCIES ARE CORRECTED.

Alonzo A. Carmichael 4/24/07

SIGNATURE DATE

A Carmichael

LICENSED ARCHITECT
ALONZO A. CARMICHAEL
No. C-16450
Exp. 10/31/07
STATE OF CALIFORNIA

STAMP OF STRUCTURAL OBSERVER OF RECORD

County of Los Angeles

DEPARTMENT OF PUBLIC WORKS BUILDING & SAFETY DIVISION

Field Office Address:

STRUCTURAL OBSERVATION REPORT FORM

STRUCTURAL OBSERVATION means the visual observation of the structural system, for general conformance to the approved plans and specifications, at significant construction stages and at completion of the structural system. Structural observation does not include or waive the responsibility for the inspections required by Sections 108, 1701 or other sections of the Los Angeles County Building Code.(Sections 106.4.5, 1702)

Report No. 3

This report includes all construction work through 12 day of June, 2007 Page No. 1 of 2

Project Address: 5228 Inadale Ave		Structural Observer of Record (SOR): A. A. Carmichael	SOR Phone No.: 323-295-7419
Building Permit No.: 050929 0024	Structural Observation performed by: Alonzo A. Carmichael	Observer Professional Lic./Reg. No.: C 16450	Observer Phone No.: Same

OBSERVED STRUCTURAL ELEMENTS AND THEIR CONNECTIONS

FOUNDATION	WALL	FRAMES	FLOOR	PORTION OBSERVED, IF NOT WHOLE
☐ Footing, Stem Walls,	☐ Concrete	☐ Steel Moment Frame	☐ Concrete	
☐ Mat Foundation	☐ Masonry	☐ Steel Braced Frame	☐ Steel Deck	
☐ Caisson, Piles, Grade Beams	☑ Wood	☐ Concrete Moment Frame	☑ Wood	
☐ Retaining Foundation Hillside Special Anchors	☐ Other:	☐ Masonry Wall Frame	☑ Others: Roof	
☐ Others:		☐ Others:		

NOTES: See attached Sheet

OBSERVED DEFICIENCIES: NONE

I DECLARE THAT THE FOLLOWING STATEMENTS ARE TRUE TO THE BEST OF MY KNOWLEDGE:

1. I AM THE ENGINEER OR ARCHITECT RETAINED BY THE OWNER TO BE IN RESPONSIBLE CHARGE FOR THE STRUCTURAL OBSERVATION IN ACCORDANCE WITH THE REQUIREMENTS OF THE CITY/COUNTY OF Los Angeles.
2. I, OR ANOTHER ENGINEER OR ARCHITECT WHO I HAVE DESIGNATED ABOVE AND IS UNDER MY RESPONSIBLE CHARGE, HAS PERFORMED THE REQUIRED SITE VISITS AT EACH SIGNIFICANT CONSTRUCTION STAGE TO VERIFY IF THE STRUCTURE IS IN GENERAL CONFORMANCE WITH APPROVED PLANS AND SPECIFICATIONS;
3. ALL DEFICIENCIES WHICH REMAIN TO BE CORRECTED HAVE BEEN INDICATED ABOVE;
4. I RECOMMEND THAT ACCEPTANCE OF THE STRUCTURAL SYSTEMS BY THE CITY/COUNTY OF _____ BE WITHHELD UNTIL ALL OBSERVED DEFICIENCIES ARE CORRECTED.

Alonzo A. Carmichael June 11, 2007

SIGNATURE DATE

LICENSED ARCHITECT ALONZO A. CARMICHAEL No. C-16450 Exp. 10/31/07 STATE OF CALIFORNIA

A A Carmichael

STAMP OF STRUCTURAL OBSERVER OF RECORD

Structural Observation Report Cont'd.

1) I performed visual observation every day during construction work for all exterior and interior walls, floor and roof framing nailing, for shear panels and floor and roof diaphragm.
2) The SIMPSON STRAPS MST48 were installed at each side of Shear panels at second floor.
3) Insulation R-19 was installed underneath of entire first floor and R-13 insulation was installed at first floor walls.
4) The holdown that was pending at NE corner of the house was installed according to plans with SIMPSON epoxy SET22 and I observed the installation.
5) Shear wall panels inside second floor walls are not installed until electrical and plumbing and R-13 insulation are inspected and approved by City Inspector.

6) I will recommend to install roofing before any rain occur.

Alonzo A. Carmichael June 11, 2007
Signature Date

LICENSED ARCHITECT
ALONZO A. CARMICHAEL
No. C-16450
Exp. 10/31/07
STATE OF CALIFORNIA

County of Los Angeles

DEPARTMENT OF PUBLIC WORKS BUILDING & SAFETY DIVISION

Field Office Address:

LARUCP

STRUCTURAL OBSERVATION REPORT FORM

STRUCTURAL OBSERVATION means the visual observation of the structural system, for general conformance to the approved plans and specifications, at significant construction stages and at completion of the structural system. Structural observation does not include or waive the responsibility for the inspections required by Sections 108, 1701 or other sections of the Los Angeles County Building Code.(Sections 106.4.5, 1702)

Report No. 4

This report includes all construction work through 27 day of June, 2007 Page No. 1 of 1

Project Address: 5228 Inadale Ave		Structural Observer of Record (SOR): A.A. Carmichael	SOR Phone No.: 323-295-7419
Building Permit No.: 050929 0024	Structural Observation performed by: Alonzo A. Carmichael	Observer Professional Lic./Reg. No.: C16450	Observer Phone No.: Same

OBSERVED STRUCTURAL ELEMENTS AND THEIR CONNECTIONS

FOUNDATION	WALL	FRAMES	FLOOR	PORTION OBSERVED, IF NOT WHOLE
☐ Footing, Stem Walls,	☐ Concrete	☐ Steel Moment Frame	☐ Concrete	
☐ Mat Foundation	☐ Masonry	☐ Steel Braced Frame	☐ Steel Deck	
☐ Caisson, Piles, Grade Beams	☑ Wood	☐ Concrete Moment Frame	☐ Wood	
☐ Retaining Foundation Hillside Special Anchors	☐ Other:	☐ Masonry Wall Frame	☐ Others:	
☐ Others:		☐ Others:		

NOTES: From my report No. 3 item No. 5 after plumbing, electrical and Mechanical were approved by city inspector, I observed the shear wall nailing at second floor walls and they are OK. to continue with Drywall and at exterior with paper lath installation

OBSERVED DEFICIENCIES: NONE

I DECLARE THAT THE FOLLOWING STATEMENTS ARE TRUE TO THE BEST OF MY KNOWLEDGE:

1. I AM THE ENGINEER OR ARCHITECT RETAINED BY THE OWNER TO BE IN RESPONSIBLE CHARGE FOR THE STRUCTURAL OBSERVATION IN ACCORDANCE WITH THE REQUIREMENTS OF THE CITY/COUNTY OF Los Angeles.
2. I, OR ANOTHER ENGINEER OR ARCHITECT WHO I HAVE DESIGNATED ABOVE AND IS UNDER MY RESPONSIBLE CHARGE, HAS PERFORMED THE REQUIRED SITE VISITS AT EACH SIGNIFICANT CONSTRUCTION STAGE TO VERIFY IF THE STRUCTURE IS IN GENERAL CONFORMANCE WITH APPROVED PLANS AND SPECIFICATIONS;
3. ALL DEFICIENCIES WHICH REMAIN TO BE CORRECTED HAVE BEEN INDICATED ABOVE;
4. I RECOMMEND THAT ACCEPTANCE OF THE STRUCTURAL SYSTEMS BY THE CITY/COUNTY OF _____ BE WITHHELD UNTIL ALL OBSERVED DEFICIENCIES ARE CORRECTED.

Alonzo A. Carmichael June 27, 2007

SIGNATURE DATE

LICENSED ARCHITECT ALONZO A. CARMICHAEL No. C-16450 Exp. 10/31/07 STATE OF CALIFORNIA

A.A. Carmichael

STAMP OF STRUCTURAL OBSERVER OF RECORD

LICENSED ARCHITECT
ALONZO A. CARMICHAEL
No. C-16450
Exp. 10/31/07
STATE OF CALIFORNIA

D.A. Carmichael

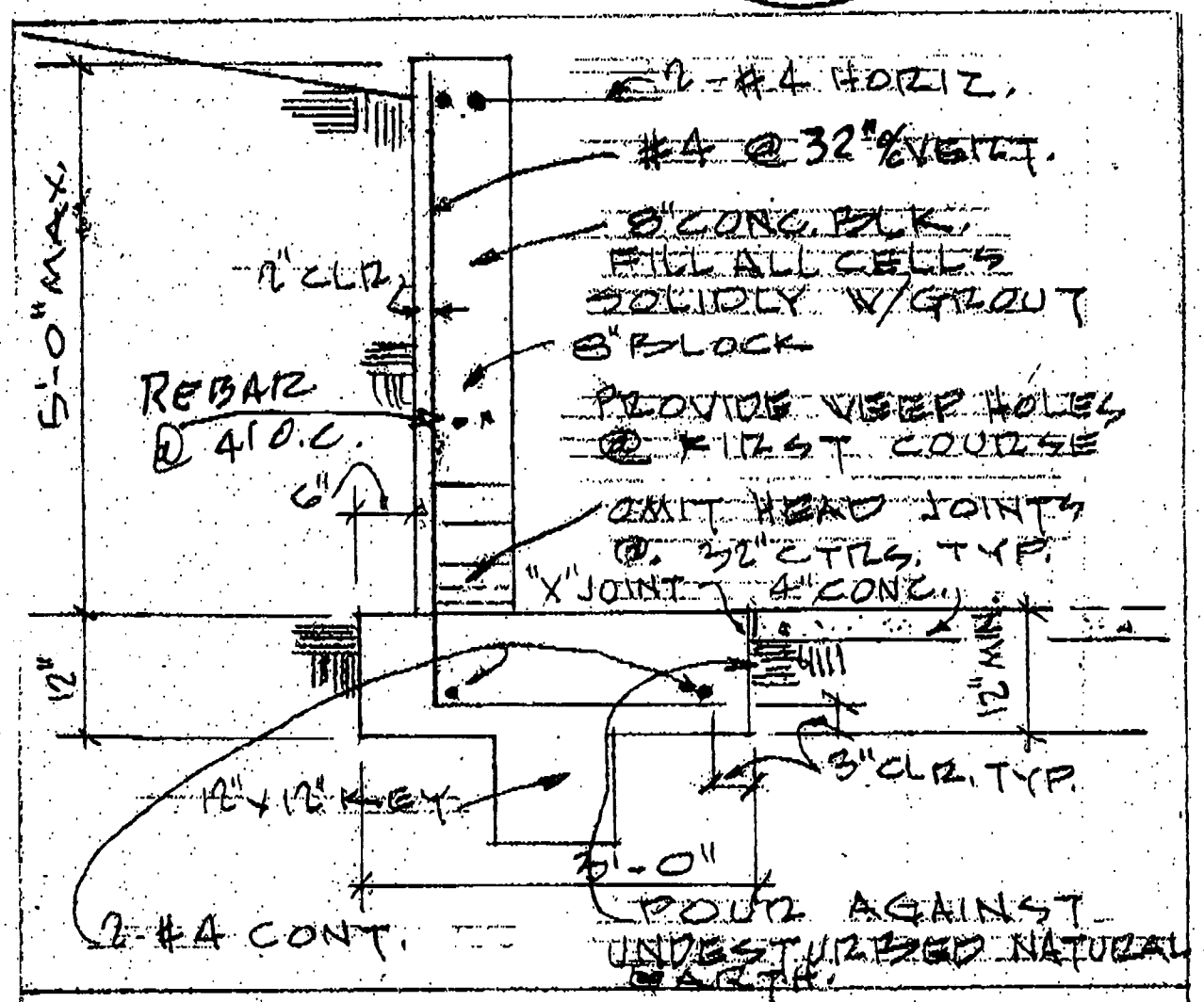

FIVE (5) FT RETWALL - REAR (D)
1/2" = 1'-0"

5828 INADALE

LICENSED ARCHITECT
ALONZO A. CARMICHAEL
No. C-16450
Exp. 10/31/07
STATE OF CALIFORNIA

D.A. Carmichael

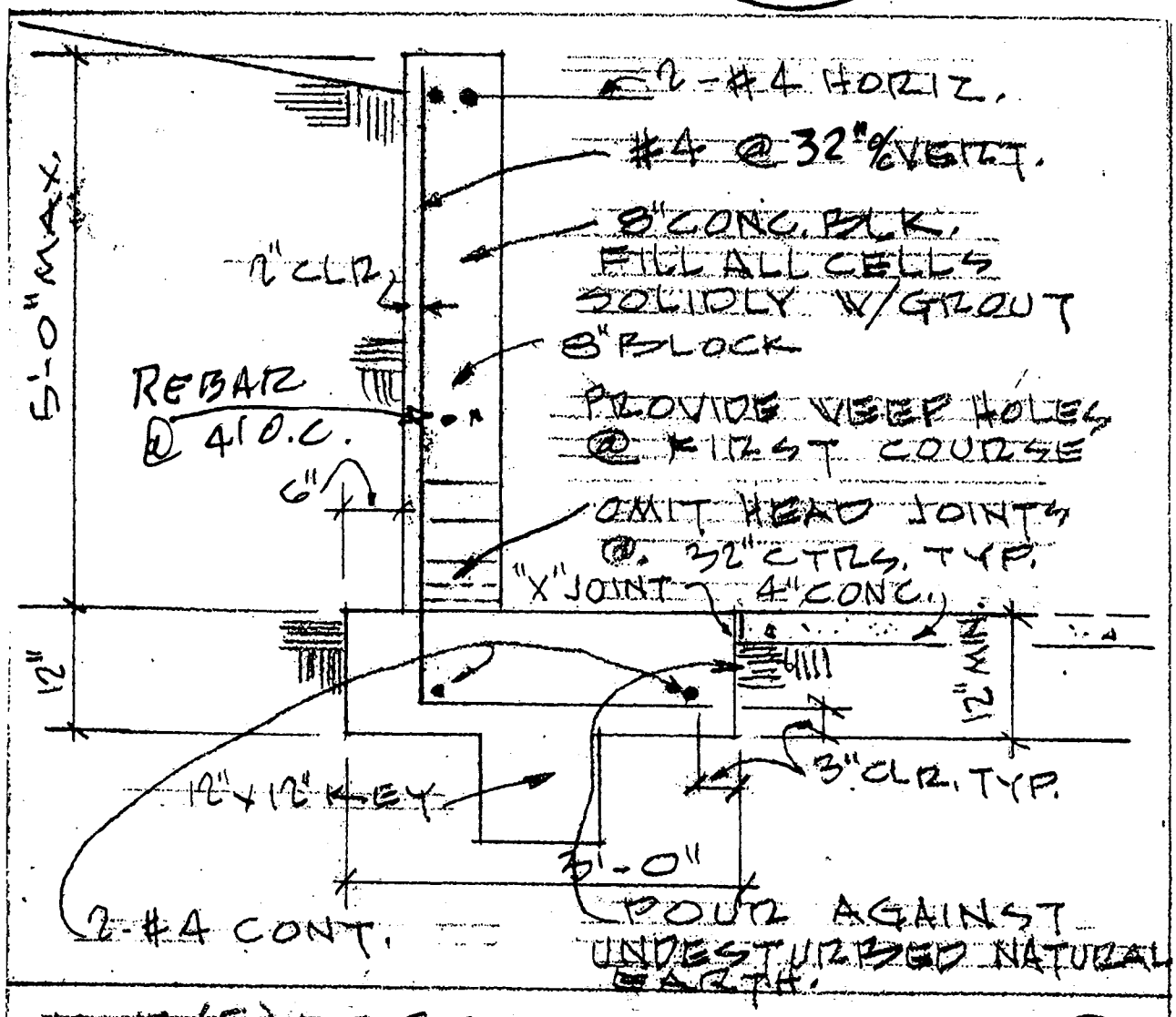

FIVE (5) FT RET. WALL - REAR (D)
1/2" = 1'-0"

DATE: March 29, 2007

DESIGN & ENGINEERING DRAFTING SERVICE

Licensed Architect
Alonzo A. Carmichael
Lic # C-16450

Design Data

RMEH page 327

$H = 4'-0$ Max.

Slope : Level EFP = 30 PSF/FT of DEPTH

$f_s = 29\,000$ psi grade 40

$f'_m = 1350$ psi

$f_m = 450$ psi NON-CONT- INSPECTION

$$n = \frac{30 \times 10^6}{1000 \times 1350} = 22$$

STEM DESIGN : Try 8" conc. block w/#4 @ 32" o/c

$H_s = 30 \times 4^2/2 = 240$ # $H_{s\,elem} = 240 \times 32/12 = 640$ #

$M_s = 30 \times 4^3/6 = 320$ Ft-# $M_{s/elem} = 320 \times 32/12 \times 12 = 10{,}240$ in-#

$d = 5.3''$ $p = .0012$ $np = 0.026$ $k = 0.202$ $J = 0.933$ $2/kJ = 10.62$

$f_m = M/bd^2 \times 2/kJ = 10240 \times 10.62/32 \times 5.3^2 = 121 < 450$ psi OK

$f_s = M/A_s Jd = 10240/.2 \times .933 \times 5.3 = 10354 < 20{,}000$ psi OK

$u = V/\Sigma Jd = 640/1.57 \times .933 \times 5.3 = 82 < 100$ psi OK

$v = V/bJd = 640/32 \times .933 \times 5.3 = 4.0 < 15$ psi OK

∴ Use 8" conc. block w/#4 @ 32" o/c

LICENSED ARCHITECT
ALONZO A. CARMICHAEL
No. C-16450
Exp. 10/31/07
STATE OF CALIFORNIA

A.A. Carmichael

OWNER Mr & Mrs Edward David Jackson

ADDRESS 5228 Inadale Ave. LA Ca 90043

SHEET 1 OF 1

Due to the fact that the foundation is an existing, use attached detail as a hold down whose value is of 5840. Note that the largest value for hold downs on plans call for a HD8A whose maximum value without continuous inspection is 5595<5840 OK! Detail C

At second floor in lieu to use standard Simpson hold downs use MST48 at each side of openings or shear panel edges whose value is 4845#>3000# of HD5A OK! Detail D

At second floor where HD8A is called for use Strap MST60 whose value is of 6420#>5595# OK. Detail D

Also in lieu of CB44 or CB46 use detail attached A due to existing footing.

With respect of detail attached where expoxy SET 22 is applied, I personally performed the structural observation on record and I inspected the hole and the epoxy application. DETAIL B

Alonzo G. Carmichael

4/24/07
DATE

A G Carmichael

LICENSED ARCHITECT
ALONZO A. CARMICHAEL
No. C-16450
Exp. 10/31/07
STATE OF CALIFORNIA

5228 Inadale Ave.
Los Angeles, Ca.

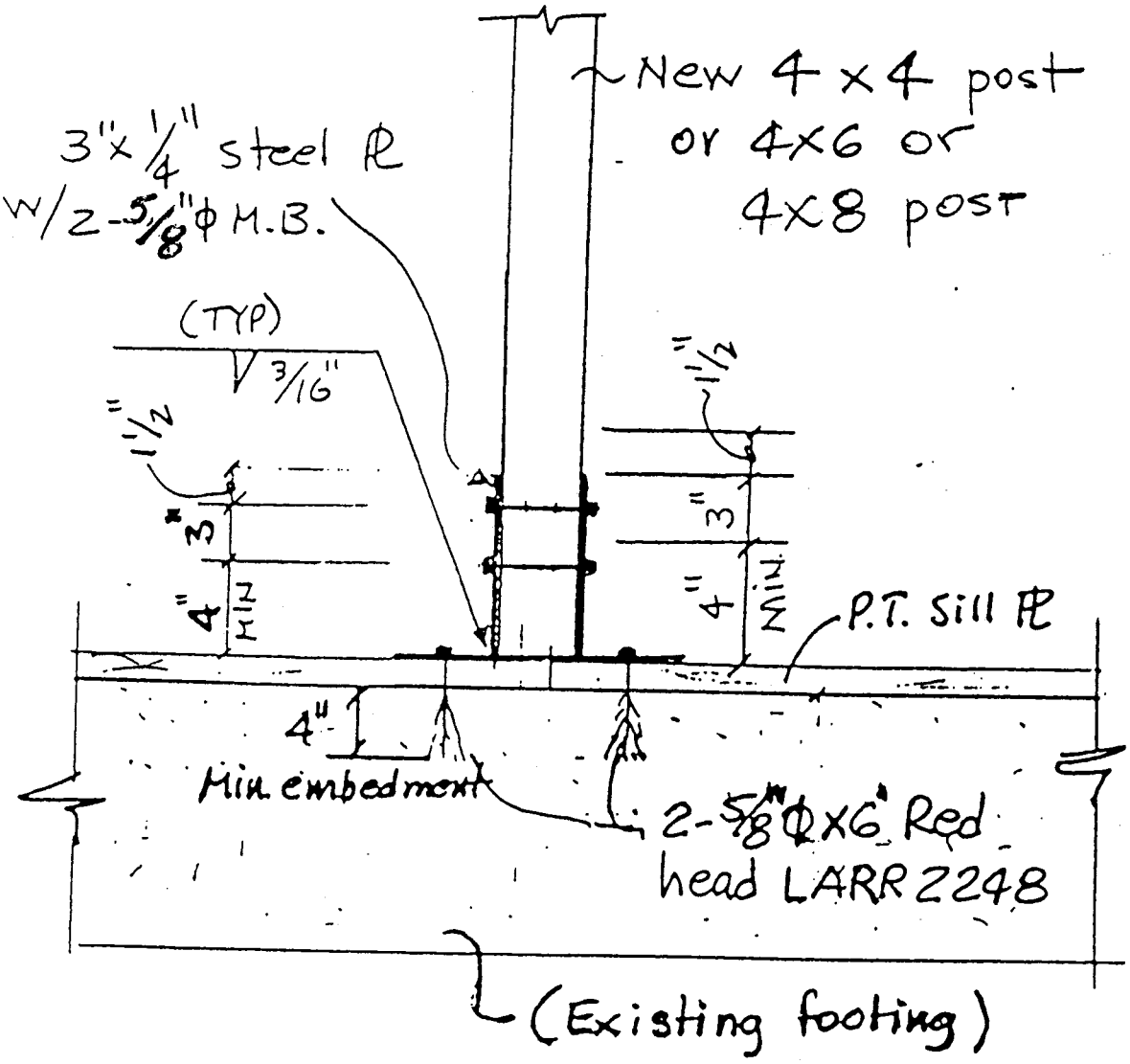
New 4 x 4 post
or 4x6 or
4x8 post
3"x 1/4" steel PL
w/2-5/8"ϕ M.B.
(TYP)
3/16"
1 1/2"
3"
4"
1 1/2"
3"
4"
P.T. Sill PL
4"
Min. embedment
2-5/8"ϕx6" Red
head LARR 2248
(Existing footing)

DETAIL A

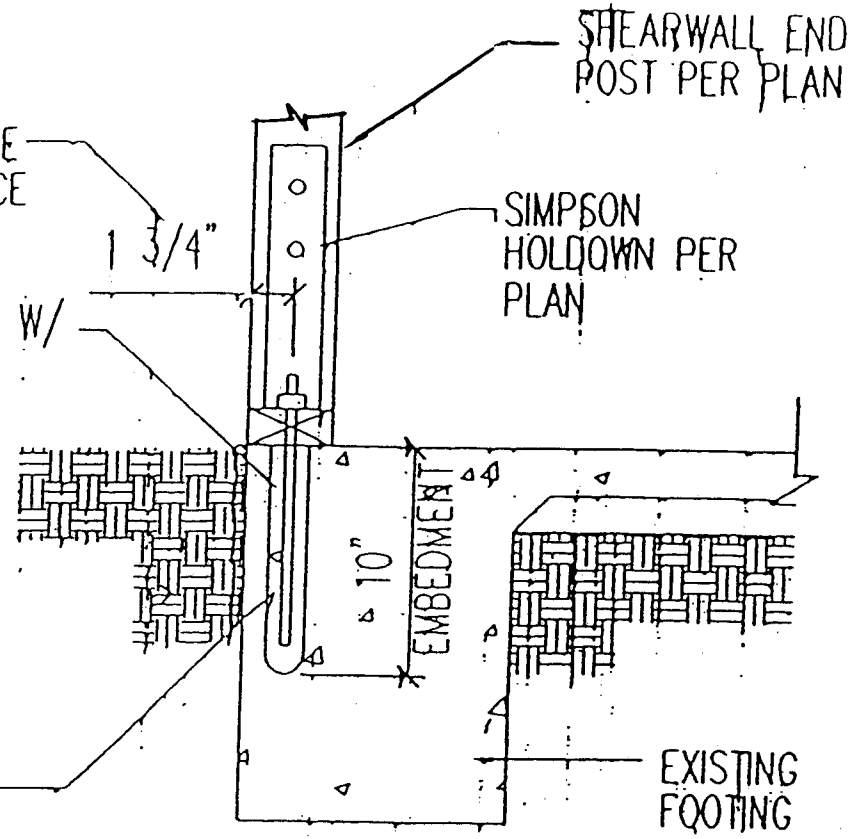

5/8"Ø
A307 ALL-THREAD ROD PER SCHEDULE W/
SIMPSON EPOXY-TIE ADHESIVE-ICBO
#4945, SPECIAL INSPEC. REQUIRED
SIMPSON SET 22
MIN EMBEDMENT 10"
RR 25279
GOOD FOR 7920#

USE 3/4"Ø DRILL BIT FOR
5/8"ØALL-THREAD AND 1" Ø
FOR 7/8" Ø ALL-THREAD MIN. EMBEDMENT 10"

HOLDOWN IN (E) FTG.

DETAIL B

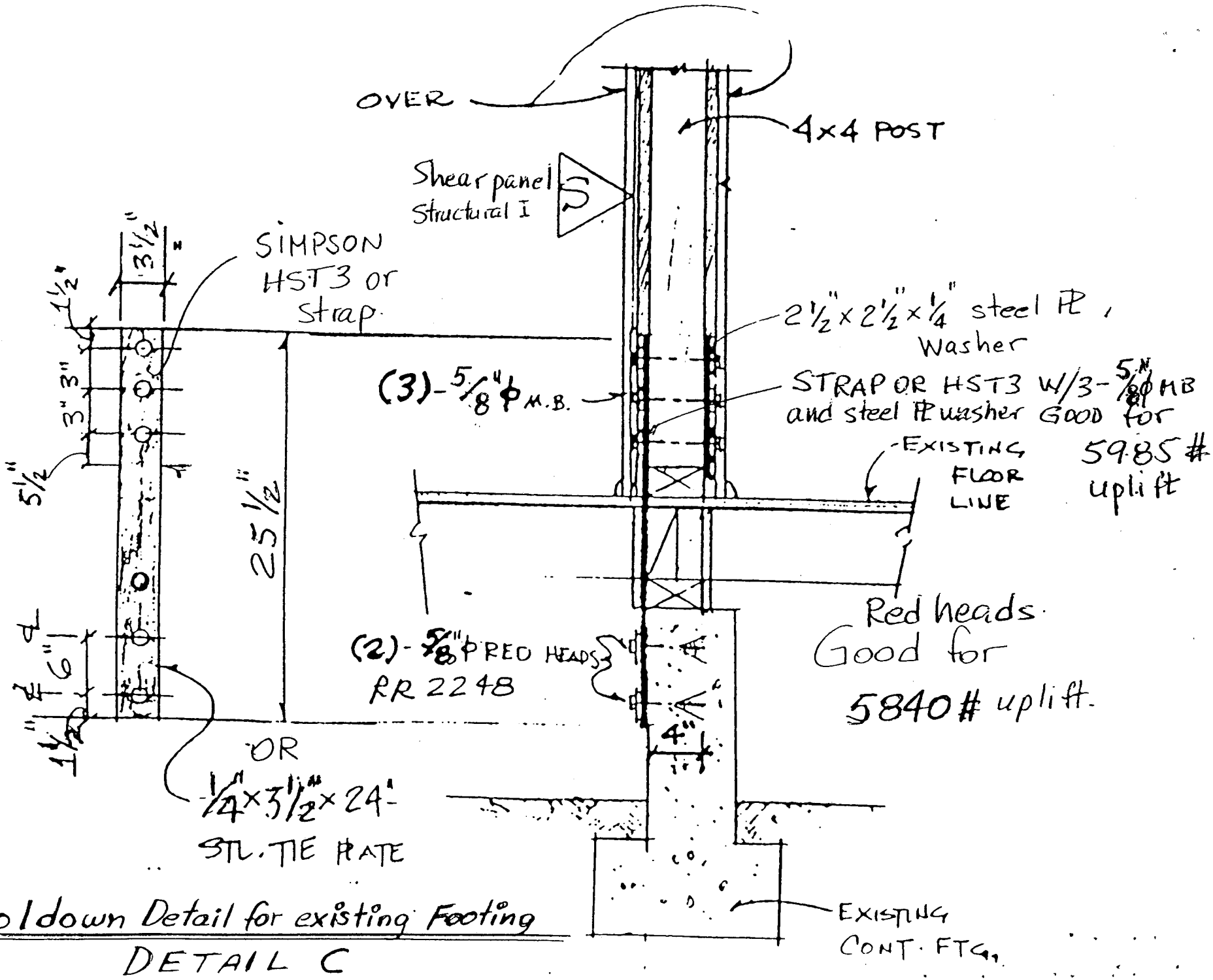

Holdown Detail for existing Footing

DETAIL C

Holdown for existing Footing

detail C

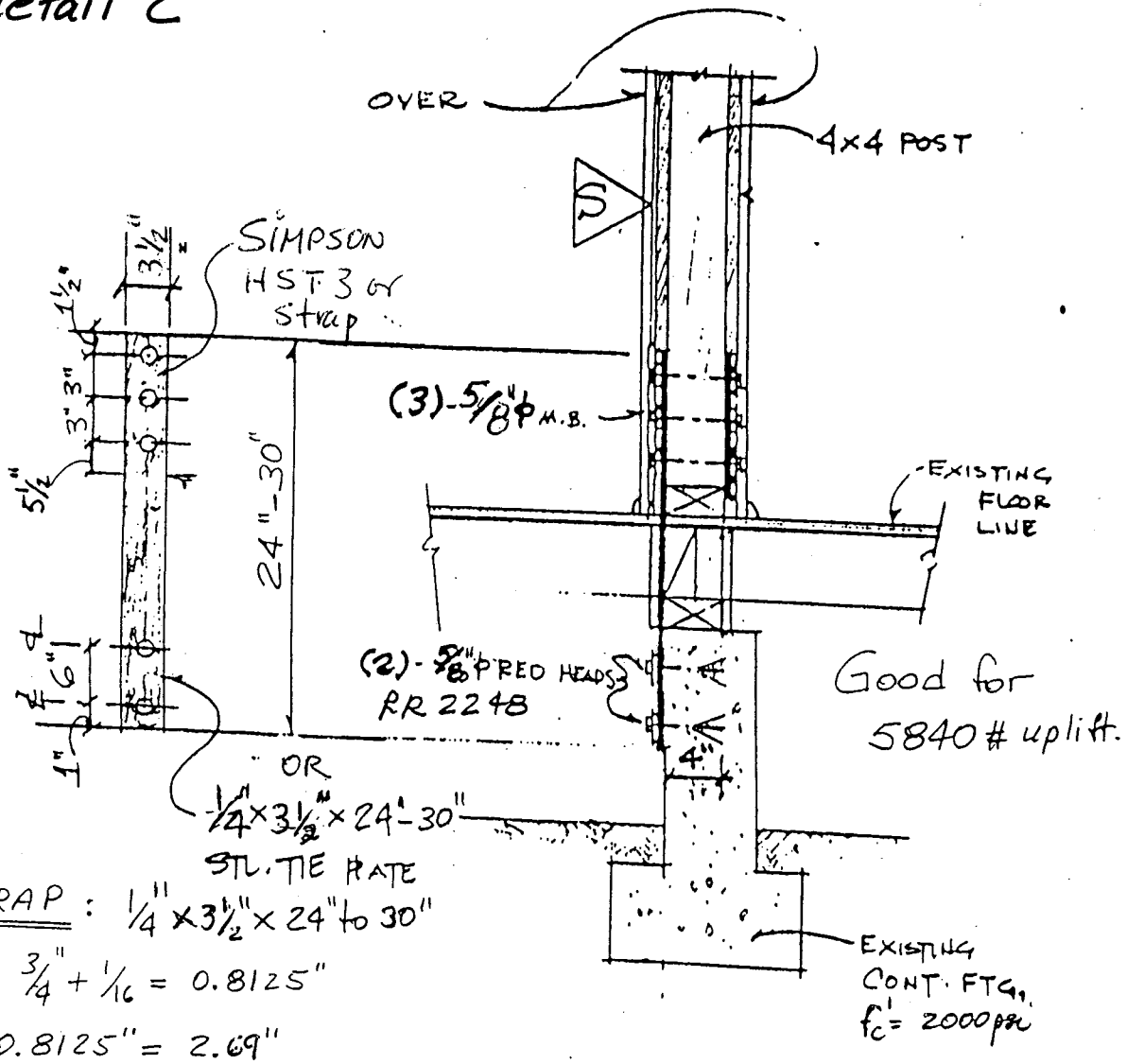

Good for 5840# uplift.

STRAP : ¼"×3½"×24" to 30"

Hole : ¾" + 1/16 = 0.8125"

3½" − 0.8125" = 2.69"

F_R = 2.69 × ¼" × 20000 = 13438 # Strap in tension

Red head (Wedge Anchors)

5/8" ϕ wedge anchor with 4" embedment in f'_c = 2000psi Shear = 3140 # for critical spacing of 18". – Minimum spacing 6"

Reduction for spacing to 6" = 0.93

Shear = 3140# × 0.93 = 2920 #

2-5/8" ϕ R.H × 2920# = 5840#

3-5/8" ϕ M.B with ¼" stl. PL in 4x4 post good for = 1200 # + 25% = 1500 #

3 × 1500 × 1.33 = 5985 # ∴ Redhead govern

Check end post

4x4 post Area = 12.25 in² L = 8'

ℓ/d = 8×12/3.5 = 27.4 < 50 OK

$F'_a = 0.3E/(\ell/d)^2 = 0.3 \times 1.6 \times 10^6/(27.4)^2$

F'_a = 639 psi

F_{max} = .639 kips × 12.25 = 7.84^k > 5.84^k

7840 # > 5840#

∴ At all existing footing use detail above.

SIMPSON
Strong-Tie®

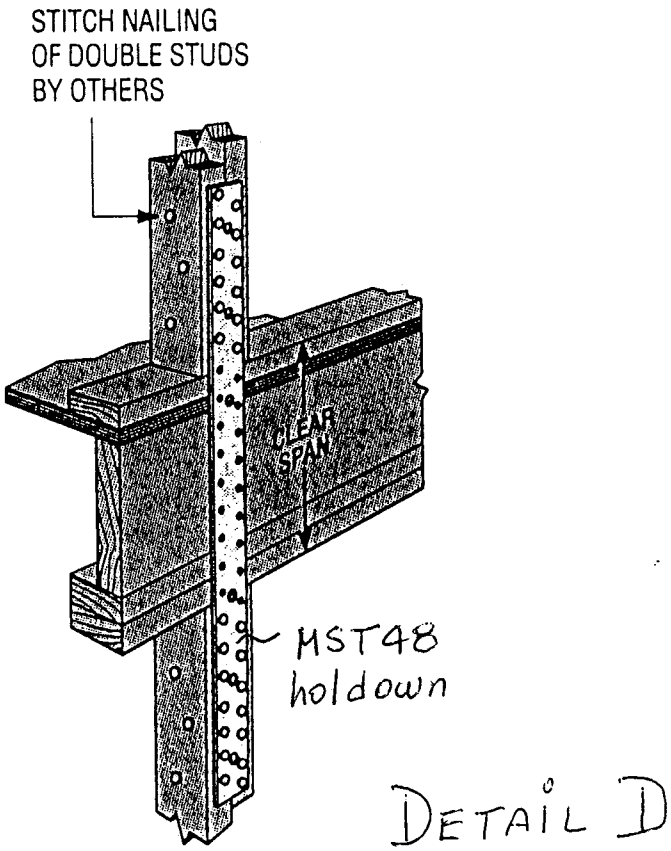

Floor-to-Floor Tie Installation showing a Clear Span

Model No.	Ga	Dimensions		Fasteners (Total)			Allowable Tension Loads (DF/SP)				Allowable Tension Loads (SPF/HF)				Code Ref.
		W	L	Nails	Bolts		Nails		Bolts		Nails		Bolts		
					Qty	Dia	(133)	(160)	(133)	(160)	(133)	(160)	(133)	(160)	
MST27	12	2 1/16	27	30-16d	4	½	3140	3770	1800	2165	2740	3290	1665	2000	3, 39, 88, 128
MST37		2 1/16	37½	42-16d	6	½	4395	5080	2525	3025	3835	4605	2335	2805	
MST48		2 1/16	48	46-16d	8	½	4845	5310	3065	3675	4200	5040	2840	3410	
MST60	10	2 1/16	60	56-16d	10	½	6420	6760	3740	4485	5600	6510	3480	4175	
MST72		2 1/16	72	56-16d	10	½	6420	6760	3740	4485	5600	6510	3480	4175	3, 39, 121, 128
HST2	7	2½	21¼	—	6	⅝	—	—	4350	5220	—	—	4030	4835	3, 39, 88, 121
HST5		5	21¼	—	12	⅝	—	—	8875	10650	—	—	8225	9870	
HST3	3	3	25½	—	6	¾	—	—	6355	7625	—	—	5550	6660	
HST6		6	25½	—	12	¾	—	—	12800	15360	—	—	11100	13320	

JOB ADDRESS 5228 INADALE

OWNER

YOUR PERMITS HAVE EXPIRED FOR

2 STORY ADD

ADDITION TO THE HOUSE.

COME IN OR CALL OFFICE AT
(323) 820 – 6500 AT 7 AM TO 9 AM
TO CORRECT THE PERMITS

1-6-10

DATE

E McDonald

INSPECTOR'S SIGNATURE

JOB ADDRESS 5228 INADALE

OWNER

YOUR PERMITS HAVE EXPIRED FOR

2 STORY ADD

ADDITION TO THE HOUSE.

COME IN OR CALL OFFICE AT

~~(323) 820 – 6500 AT 7 AM TO 9 AM~~

TO CORRECT THE PERMITS

12-9-09

DATE

LMCDowell

INSPECTOR'S SIGNATURE

JOB ADDRESS 5228 INADALE

OWNER

1) PRIOR TO FINAL INSPECTION THE CONTRACTOR MUST

a) REMOVE ALL BUILDING MATERIAL DEBRIS.

b) PROVIDE LANDSCAPING & DRAINAGE AWAY FROM BUILDING

c) COMPLETE WALKWAY

d) POST ADDRESS VISIBLE FROM STREET

e) FRONT & INTERIOR STAIRS MUST MEET MINIMUM STANDARDS

f) THE DECK WATER PROOFING MUST BE AN APPROVED TYPE METHOD WITH 1/4" PER FOOT FALL.

g) FLOOR SYSTEM MUST BE DESIGNED TO SUPPORT LIGHT WEIGHT CONCRETE

h) VENT KITCHEN HOOD

i) PROVIDE 50% FLOURESCENT LIGHTING IN KITCHEN & BATHROOMS

DATE

INSPECTOR'S SIGNATURE

JOB ADDRESS 5228 INADALE

OWNER

J) PROVIDE 2" TRAP FOR WASHER & CLEANOUT FOR KITCHEN SINK

K) PROVIDE EGRESS FOR BEDROOM WINDOWS

L) COMPLETE ALL PLUMBING FIXTURE DRAINS.

M) PROVIDE APPROVED TYPE MIXING VALVE (TEMPERATURE & PRESSURE REGULATING)

N) REPLACE BROKEN WINDOW IN OFFICE

O) PROVIDE AS BUILT DRAWINGS FOR CHANGES MADE FROM ORIGINAL PLANS.

P) SUPPORT BALCONY RAILING.

Q) SMOKE DETECTORS IN BEDROOMS & HALLWAYS

R) MAINTAIN 6'8" HEADROOM CLEARANCE & ~~TOLERAN~~ MAXIMUM 3/8" TREAD TOLERANCES FOR STAIRS

DATE INSPECTOR'S SIGNATURE

JOB ADDRESS 5728 INADALE

OWNER

3) REMOVE A/C UNIT OUTSIDE 3' ELECTRICAL PANEL CLEARANCE

4) TRACE ~~[illegible]~~ HEATER VENT THAT IS OFFSET IN WALL

5) COMPLETE ELECTRICAL PANEL SERVICE DROP OUTSIDE WALL.

6) CRACKS IN STUCCO ON GARAGE WALL

3/13/08
WCHATMAN

DATE

INSPECTOR'S SIGNATURE

Owner Notification of Expired Permits

- Notice of Expiration of Permits
  Date:

- Sent pre-45 day letter
  Date:

- Sent 45 day letter
  Date:

- Contact homeowner by phone
  10 day- Date: 11-9-09
  NO PHONE #

- First visit to sight: leave correction notice
  15 day- Date:

- Second visit to sight: leave correction notice
  15 day- Date:

- Forward to Curtis Herbert
  Date:

COUNTY OF LOS ANGELES
DEPARTMENT OF PUBLIC WORKS
"To Enrich Lives Through Effective and Caring Service"

GAIL FARBER, Director

BUILDING AND SAFETY DIVISION
SOUTHWEST OFFICE
1320 W. IMPERIAL HIGHWAY
LOS ANGELES, CALIFORNIA 90044
Telephone: 323-820-6500
Fax: 323-756-0780
http://www.ladpw.org

ADDRESS ALL CORRESPONDENCE TO:
1320 W. IMPERIAL HIGHWAY
LOS ANGELES, CALIFORNIA 90044

IN REPLY PLEASE
REFER TO FILE:

August 26, 2009

Jackson,Edward D
5228 Inadale Ave
Los Angeles, CA 90043-

Dear Jackson,Edward D:

5228 INADALE AV, LOS ANGELES
Assessor's ID#: 5010-007-024

By letters dated **June 1, 2009**, you were notified that violations of the Los Angeles County Building Code (Title 26) were found to exist on the Subject Property and were directed to obtain all required permits to correct these violations and bring the Subject Property into compliance with Title 26.

As of the date of this letter, our records indicate that [no permits have been obtained] and/or the following violations continue to exist:

1. Section 109.1 Occupancy and use of the structure without Building Official approval.BL-0509290031 BL-0509290024 EL-0607110004 PL-0607110001

Pursuant to Section 103.4 of Title 26, please be advised that if these violations are not remedied to the satisfaction of the Building Official by **October 10, 2009**, which is 45 days from the date of this notice, the Building Official may, at any time thereafter, record with the County Recorder's Office a notice that the subject property is in violation of Title 26.

Additionally, please be advised that, pursuant to Section 107.9 of Title 26, a charge of **$416.00** is hereby assessed to you for the processing of this 45-day notice.

Further, if the Building Official processes and records the above-referenced Notice of Violation, you will be assessed an additional charge of **$330.60.**

Fees are based on the current fee schedule and are subject to adjustment each fiscal year (July 1).

Any further information may be obtained by contacting the undersigned at the District Office listed above.

Very truly yours,

EMANUEL S. MCDOWELL
Building Engineering Inspector

Date Posted 8-26-9 By_____

09-001329 2

COUNTY OF LOS ANGELES
DEPARTMENT OF PUBLIC WORKS
"To Enrich Lives Through Effective and Caring Service"

GAIL FARBER, Director

BUILDING AND SAFETY DIVISION
SOUTHWEST OFFICE
1320 W. IMPERIAL HIGHWAY
LOS ANGELES, CALIFORNIA 90044
Telephone: 323-820-6500
Fax: 323-756-0780
http://www.ladpw.org

ADDRESS ALL CORRESPONDENCE TO:
1320 W. IMPERIAL HIGHWAY
LOS ANGELES, CALIFORNIA 90044

IN REPLY PLEASE
REFER TO FILE:

June 1, 2009

Jackson,Edward D
5228 Inadale Ave
Los Angeles, CA 90043-

Dear Jackson,Edward D,

5228 INADALE AV, LOS ANGELES
Assessor's ID#: 5010-007-024

An inspection of the above-referenced subject property reveals that violations of the Los Angeles County Building Code (Title 26) exist as described on the attached Notice of Violation card.

Pursuant to Section 103.4 of Title 26, where property is determined to be in violation of any provision of Title 26, the Building Official may initiate proceedings to record a Notice of Violation against the subject property with the County Recorder's office.

Additionally, pursuant to Section 103.5 of Title 26, any persons that violate any provision of Title 26 shall be responsible for the costs of any and all code enforcement actions taken by the Building Official in response to such violations. Pursuant to Section 107.9 of Title 26, these costs may include (without limitation) the following:

1.	For processing a 45-day notice pursuant to Section 103.4:	**$416.00**
2.	For processing and recording a Notice of Violation pursuant to Section 103.4:	**$330.60**
3.	For processing and recording a Rescission of Notice of Violation pursuant to Section 103.4:	**$284.30**

These fees are based on the current fee schedule and are subject to adjustment each fiscal year (July 1).

This notice is provided to allow you to abate (correct) the noted building code violations before the Building Official initiates proceedings to record a Notice of Violation and to avoid the assessment of any corresponding code enforcement fees to you.

If you have **not complied with all orders** by **June 16, 2009**, to commence and bring the subject property into code compliance, the Building Official will initiate proceedings to record a notice of violation and assess any corresponding code enforcement fees to you. Please be advised that, as part of the permit process, you may need to submit building plans for review and approval by the Building Official.

Any further information may be obtained by contacting the undersigned at 323-820-6500.

Very truly yours,

EMANUEL S. MCDOWELL
Building Engineering Inspector

Date Posted 6-1-09 By OM

09-001329 2

Lapwrp118R.rtf
Last Modified: 05/08/2004

COUNTY OF LOS ANGELES
DEPARTMENT OF PUBLIC WORKS
"To Enrich Lives Through Effective and Caring Service"

GAIL FARBER, Director

BUILDING AND SAFETY DIVISION
SOUTHWEST OFFICE
1320 W. IMPERIAL HIGHWAY
LOS ANGELES, CALIFORNIA 90044
Telephone: 323-820-6500
Fax: 323-756-0780
http://www.ladpw.org

ADDRESS ALL CORRESPONDENCE TO:
1320 W. IMPERIAL HIGHWAY
LOS ANGELES, CALIFORNIA 90044

IN REPLY PLEASE
REFER TO FILE:

NOTICE OF VIOLATION

June 1, 2009

SUBJECT: **5228 INADALE AV, LOS ANGELES**

OWNER: Jackson,Edward D
PROPERTY: **5228 Inadale Ave, Los Angeles, CA 90043-**

THE WORK PERFORMED IS IN VIOLATION OF THE ORDINANCE (S) INDICATED BELOW:

- [x] **Building Code**
- [x] **Plumbing Code**
- [x] **Mechanical Code**
- [x] **Electrical Code**
- [ ] **Grading Code**
- [ ] **Zoning Code**

DESCRIPTIONS

1. Section 109.1 Occupancy and use of the structure without Building Official approval.BL-0509290031 BL-0509290024 EL-0607110004 PL-0607110001

STOP ALL WORK

- [x] Submit plans for the cited work within 10 days to the office listed above and apply for a plan check for the required permit(s).
- [x] Obtain permit(s) within 10 days office listed above for the cited work.
- [ ] A referral has been made to the Enforcement Section of the Department of Regional Planning.
- [x] A referral may be made to the District Attorney's Office for Criminal Prosecution.

Issued By: Emanuel S. Mcdowell Phone: 323-820-6500

09-0013292

Lapwrp118R.rtf
Last Modified: 05/08/2004

COUNTY OF LOS ANGELES

DEPARTMENT OF PUBLIC WORKS

"To Enrich Lives Through Effective and Caring Service"

DEAN D. EFSTATHIOU, Acting Director

SOUTHWEST DISTRICT OFFICE
1320 W. IMPERIAL HIGHWAY
Los Angeles, CA 90044
Telephone: (323) 820-6500

NOTICE OF PERMIT EXPIRATION

Date 4-29-09

Dear Property Owner ,

Job Address: 5228 INADALE AV

This notice is provided to inform you that the following permits have expired due to time limitation, pursuant to Section 106.5.4 of the 2008 County of Los Angeles Building Code:

- [x] Building Permit No. 0509290024
- [x] Electrical Permit No. 0607110004
- [ ] Mechanical Permit No. _____
- [x] Plumbing Permit No. 0607110001
- [ ] Swimming Pool Permit No. _____
- [ ] Grading Permit No. _____

Permits and additional fees are required to recommence work.

Any further information may be obtained by contacting the undersigned at (323) 820-6507.
And 7:30 am to 10:00 am

Very truly yours,

EMANUEL MC DOWELL
Building Engineering Inspector

D A P T S PROPERTY ACTION INQUIRY/SELECT 04/21/09
BSINIT 17:00:28
****
END OF DATA PAGE 1
LEGAL TYPE/NBR: ST 11533 11 A HOLD: _
SITUS ADDR: 5228 INADALE AV LOSA 900431537
OWNER NAME: HORNSBY MERCEDES OWNER: _ SITUS: _
INITIATE PERMIT _

SEL	IDENTIFIER	DESCRIPTION	ISSUED	FINALED	DISPO
_	BL 0509290031	RETAINING WALL 23'X 3"LONG 5'HEIG	07/11/06		NORMAL
_	BL 0509290024	2ND STORY ADDITION OF MSTR BDRM/BA	07/11/06		NORMAL
_	EL 0607110004	27 OUTLETS AND 20 LIGHTS	07/11/06		NORMAL
_	PL 0607110001	3 TOILETS, 3 SINKS AND 3 BATHTUB/S	07/11/06		NORMAL

DPC905 NEXT TRANSACTION: _____ PF1=HELP