COUNTY OF LOS ANGELES
DEPARTMENT OF PUBLIC WORKS
BUILDING AND SAFETY / LAND DEVELOPMENT

FIRESTONE
7807 COMPTON
LOS ANGELES CA 90001
PHONE: (323) 586-6541 EXT:

0100

BUILDING PERMIT
NEW RESIDENTIAL
BL 0100 0310220022

LEGAL ID:
ON FILE

ASSESSOR INFORMATION NUMBER:
6008-031-028

TENANT:

OWNER: TEL. NO:
MERONA ENTERPRISES, INC (562) 862-4360-
9550 FIRESTONE BV
DOWNEY, CA 90241

APPLICANT: TEL. NO:
SAME AS OWNER -

CONTRACTOR: TEL. NO:
SAME AS OWNER -
LIC. NO

ARCHITECT OR ENGINEER: TEL. NO:
-
LIC. NO:

MAP NO:	SEWER MAP BOOK:	PAGE:	FIRE ZONE:	CMP:
X	X	X	3	04

NO. OF FAMILIES:	DWELLING UNITS:	APT/COND:	STAT CLASS:
		NO	12

AIR QUALITY:	SCHOOL WITHIN 1000 FEET	HAZARDOUS MATERIALS
NO	NO	NO

REQUIRED SET BACK	YARD:	HWY:	TOTAL SETBACK FROM PROP LINE:	EXIST WIDTH:
FRONT PL-	0	0	0	0
SIDE PL-	0	0	0	0

	SQ. FT	NO. OF STORIES	CONST TYPE	NEW OCCUP GROUP
STRUCTURE:	4500	1	VN	B
GARAGE:				
OTHER:				

USE ZONE: X

BLDGS. NOW ON LOT: VALUATION: 15,000

FEES PAID

FEE DESCRIPTION:	QUANTITY:	UOM:	AMOUNT:
AA BLDG PERMIT ISSUANCE			22.00
AE STRONG MOTION OTHER	15000.00	VAL	3.15
AX BUILDING REVIEW FEE			64.90
D2 PERMIT W/O EN-HC	15000.00	VAL	239.30
	TOTAL FEES		329.35

REPORT ID: DPR261 ROUTE TO: BS0100

BUILDING ADDRESS:
1423 GAGE AV E BLDG. B
LOSA CA 900011259
NEAREST CROSS STREET:
THOMAS PAGE: 674 GRID: F6 LOCALITY: LOS ANGELES

ISSUED ON:	PROCESSED BY:	EXPIRES ON:
10/23/03	HG	10/17/04

FINAL DATE	FINAL BY:	CODE:
10/23/03	WE HATMAN	

DESCRIPTION OF WORK
TENANT IMPROVEMENT FOR 99 CENT STORE.

SPECIAL CONDITIONS:

APPROVALS	DATE	INSPECTOR SIGNATURE
LOCATION AND SETBACKS		
SOILS ENGINEER APPROVAL		
FOUNDATION/TRENCH FORMS		
SLAB/UNDER FLOOR		
RAISED FLOOR FRAMING		
UNDERFLOOR INSULATION		
1ST LEVEL FLOOR SHEATH		
2ND LEVEL FLOOR SHEATH		
ROOF SHEATHING		
FIRE DEPT. FRAME INSPECT		
BLDG DEPT. FRAME INSPECT		
SHEAR PANELS		
INSULATION/WEATHER STRIP		
INTERIOR LATH/DRYWALL		
EXTERIOR LATH		
LOT DRAINAGE		
SMOKE DETECTION DEVICES		
FIRE DEPARTMENT APPROVAL		

logged

LICENSED CONTRACTOR'S DECLARATION

I hereby affirm under penalty of perjury that I am licensed under provisions of Chapter 9 (commencing with Section 7000) of Division 3 of the Business and Professions Code, and my license is in full force and effect.

License Class _____ Lic. No. _____

Contractor's Signature _____ Date _____

OWNER-BUILDER DECLARATION

I hereby affirm under penalty of perjury that I am exempt from the Contractors License Law for the following reason (Sec. 7031.5, Business and Professions Code: Any city or county which requires a permit to construct, alter, improve, demolish, or repair any structure, prior to its issuance, also requires the applicant for such permit to file a signed statement that he or she is licensed pursuant to the provisions of the Contractors License Law (Chapter 9 (commencing with Section 7000) of Division 3 of the Business and Professions Code) or that he or she is exempt therefrom and the basis for the alleged exemption. Any violation of Section 7031.5 by any applicant for a permit subjects the applicant to a civil penalty of not more than five hundred dollars ($500).):

☐ I am exempt under Sec. _____ , B.& P.C. for this reason:

_____

_____

[Electrical, Plumbing & Sewer Permits Only]

☐ I, as owner of the property, will do the work, and the structure is not intended or offered for sale (Sec. 7044, Business and Professions Code: The Contractors License Law does not apply to an owner of property who builds or improves thereon, and who does such work himself or herself, provided that such improvements are not intended or offered for sale. If, however, the building or improvement is sold within one year of completion, the owner-builder will have the burden of proving that he or she did not build or improve for the purpose of sale.).

[All Other Permits]

☐ I, as owner of the property, or my employees with wages as their sole compensation, will do the work, and the structure is not intended or offered for sale (Sec. 7044, Business and Professions Code: The Contractors License Law does not apply to an owner of property who builds or improves thereon, and who does such work himself or herself or through his or her own employees, provided that such improvements are not intended or offered for sale. If, however, the building or improvement is sold within one year of completion, the owner-builder will have the burden of proving that he or she did not build or improve for the purpose of sale.).

☐ I, as owner of the property, am exclusively contracting with licensed contractors to construct the project (Sec. 7044, Business and Professions Code: The Contractors License Law does not apply to an owner of property who builds or improves thereon, and who contracts for such projects with a contractor(s) licensed pursuant to the Contractors License Law.).

Owner Signature _____ Date _____

WORKER'S COMPENSATION DECLARATION

I hereby affirm under penalty of perjury one of the following declarations:

☐ I have and will maintain a certificate of consent to self-insure for worker's compensation, as provided for by Section 3700 of the Labor Code, for the performance of the work for which this permit is issued.

☐ I have and will maintain worker's compensation insurance, as required by Section 3700 of the Labor Code, for the performance of the work for which this permit is issued. My worker's compensation insurance carrier and policy number are:

Carrier _____

Policy Number _____

☐ I certify that in the performance of the work for which this permit is issued, I shall not employ any person in any manner so as to become subject to the worker's compensation laws of California, and agree that if I should become subject to the worker's compensation provisions of Section 3700 of the Labor Code, I shall forthwith comply with those provisions.

Applicant Signature _____ Date _____

WARNING: FAILURE TO SECURE WORKER'S COMPENSATION COVERAGE IS UNLAWFUL, AND SHALL SUBJECT AN EMPLOYER TO CRIMINAL PENALTIES AND CIVIL FINES UP TO ONE HUNDRED THOUSAND DOLLARS ($100,000), IN ADDITION TO THE COST OF COMPENSATION, DAMAGES AS PROVIDED FOR IN SECTION 3706 OF THE LABOR CODE, INTEREST, AND ATTORNEY'S FEES.

LOBBYIST ORDINANCE CERTIFICATION

[Complete this section for permits in unincorporated Los Angeles County only]

This is to certify that I, as permit applicant, am familiar with the requirements of Los Angeles County Code Chapter 2.160 et seq., (relating to the Los Angeles County Lobbyist Ordinance) and that all persons acting on behalf of myself complied and will continue to comply therewith through the application process.

IN SIK KO 10-23-03

Applicant (Print Name) Applicant Signature

Company Name (if employed by an entity/agency) Date

JOB ADDRESS
LOCALITY

HAZARDOUS MATERIAL DECLARATION

Will the applicant or future building occupant handle a hazardous material or a mixture containing a hazardous material equal to or greater than the amount specified on the hazardous materials information guide?

Yes ☐ No ☐

Will the intended use of the building by the applicant or future building occupant require a permit for construction or modification from the South Coast Air Quality Management District (SCAQMD)? See permitting checklist for guidelines.

Yes ☐ No ☐

I have read the hazardous materials information guide and the SCAQMD permitting checklist, I understand my requirements under the Los Angeles County Code Title 2, Chapter 220 Sections 220.100 through 220.140 concerning hazardous material reporting and for obtaining a permit from the SCAQMD.

ASBESTOS NOTIFICATION

☐ Notification letter sent to SCAQMD or EPA

☐ I declare that notification of asbestos removal is not applicable to addressed project.

CONSTRUCTION LENDING AGENCY

I hereby affirm under penalty of perjury that there is a construction lending agency for the performance of the work for which this permit is issued (Sec. 3097, Civ.C.).

Lender's Name _____

Lender's Address _____

I certify that I have read this application and state under the penalty of perjury that the above information is correct. I agree to comply with all City and County ordinances and State laws relating to building construction, and hereby authorize representatives of this County to enter upon the above-mentioned property for inspection purposes.

10-23-03

Applicant or Agent Signature **Date**

1423 GAGE

COUNTY OF LOS ANGELES
DEPARTMENT OF PUBLIC WORKS
BUILDING AND SAFETY / LAND DEVELOPMENT

FIRESTONE
7807 COMPTON
LOS ANGELES CA 90001
PHONE: (323) 586-6541 EXT:

0100

ELECTRICAL PERMIT
EL 0100 0309080031

LEGAL ID:
ON FILE

ASSESSOR INFORMATION NUMBER:
6008-031-028

TENANT:
MOM'S 99

OWNER: TEL. NO:
MERONO ENTERPRISES (714) 943-0149-
9550 FIRESTONE
LOSA 90006

APPLICANT: TEL. NO:
DIA-TECK (213) 700-4796-
943 S ARAPAHOE ST105
LOSA 90006

CONTRACTOR: TEL. NO:
DIA-TECK (909) 860-8226-
1755 LEANING PINE DR. LIC. NO
DIAMOND BAR, CA 91765 659066 C20

ARCHITECT OR ENGINEER: TEL. NO:
LIC. NO:

FEES PAID

FEE DESCRIPTION:	QUANTITY: UOM:	AMOUNT:
A1 PERMIT ISSUANCE FEE		22.00
IB N-RES WTR HTR LT 3HP	1.00 WTR	12.30
	TOTAL FEES	34.30

REPORT ID: DPR265 ROUTE TO: BS0100

BUILDING ADDRESS:
1423 GAGE AV E BLDG. B
LOSA CA 900011259
NEAREST CROSS STREET: COMPTON
THOMAS PAGE: 674 GRID: F6 LOCALITY: FIRESTONE

ISSUED ON:	PROCESSED BY:	PLAN BY:	EXPIRES ON:
09/08/03	HG		03/06/04

FINAL DATE: 11/6/03 FINAL BY: WCHATMAN CODE:

DESCRIPTION OF WORK
ELECTRICAL PERMIT. add STORE

SPECIAL CONDITIONS:

APPROVALS	DATE	INSPECTOR SIGNATURE
TEMPORARY POWER POLE		
UNDERGROUND CONDUIT		
UFER GROUND		
ROUGH CONDUIT		
ROUGH WIRING		
MAIN WATER LINE PLASTIC Y/N METAL Y/N		
UTILITY COMPANY NOTIFIED		

tagged
ES

LICENSED CONTRACTOR'S DECLARATION

I hereby affirm under penalty of perjury that I am licensed under provisions of Chapter 9 (commencing with Section 7000) of Division 3 of the Business and Professions Code, and my license is in full force and effect.

License Class C-36 C-10 Lic. No. 859066

Contractor's Signature _____ Date 9/7/03

OWNER-BUILDER DECLARATION

I hereby affirm under penalty of perjury that I am exempt from the Contractors License Law for the following reason (Sec. 7031.5, Business and Professions Code: Any city or county which requires a permit to construct, alter, improve, demolish, or repair any structure, prior to its issuance, also requires the applicant for such permit to file a signed statement that he or she is licensed pursuant to the provisions of the Contractors License Law (Chapter 9 (commencing with Section 7000) of Division 3 of the Business and Professions Code) or that he or she is exempt therefrom and the basis for the alleged exemption. Any violation of Section 7031.5 by any applicant for a permit subjects the applicant to a civil penalty of not more than five hundred dollars ($500).):

☐ I am exempt under Sec. _____ , B.& P.C. for this reason:

_____

_____

[Electrical, Plumbing & Sewer Permits Only]

☐ I, as owner of the property, will do the work, and the structure is not intended or offered for sale (Sec. 7044, Business and Professions Code: The Contractors License Law does not apply to an owner of property who builds or improves thereon, and who does such work himself or herself, provided that such improvements are not intended or offered for sale. If, however, the building or improvement is sold within one year of completion, the owner-builder will have the burden of proving that he or she did not build or improve for the purpose of sale.).

[All Other Permits]

☐ I, as owner of the property, or my employees with wages as their sole compensation, will do the work, and the structure is not intended or offered for sale (Sec 7044, Business and Professions Code: The Contractors License Law does not apply to an owner of property who builds or improves thereon, and who does such work himself or herself or through his or her own employees, provided that such improvements are not intended or offered for sale. If, however, the building or improvement is sold within one year of completion, the owner-builder will have the burden of proving that he or she did not build or improve for the purpose of sale.).

☐ I, as owner of the property, am exclusively contracting with licensed contractors to construct the project (Sec. 7044, Business and Professions Code: The Contractors License Law does not apply to an owner of property who builds or improves thereon, and who contracts for such projects with a contractor(s) licensed pursuant to the Contractors License Law.).

Owner Signature _____ Date _____

WORKER'S COMPENSATION DECLARATION

I hereby affirm under penalty of perjury one of the following declarations:

☐ I have and will maintain a certificate of consent to self-insure for worker's compensation, as provided for by Section 3700 of the Labor Code, for the performance of the work for which this permit is issued.

☐ I have and will maintain worker's compensation insurance, as required by Section 3700 of the Labor Code, for the performance of the work for which this permit is issued. My worker's compensation insurance carrier and policy number are:

Carrier _____

Policy Number _____

☐ I certify that in the performance of the work for which this permit is issued, I shall not employ any person in any manner so as to become subject to the worker's compensation laws of California, and agree that if I should become subject to the worker's compensation provisions of Section 3700 of the Labor Code, I shall forthwith comply with those provisions.

Applicant Signature _____ Date _____

WARNING: FAILURE TO SECURE WORKER'S COMPENSATION COVERAGE IS UNLAWFUL, AND SHALL SUBJECT AN EMPLOYER TO CRIMINAL PENALTIES AND CIVIL FINES UP TO ONE HUNDRED THOUSAND DOLLARS ($100,000), IN ADDITION TO THE COST OF COMPENSATION, DAMAGES AS PROVIDED FOR IN SECTION 3706 OF THE LABOR CODE, INTEREST, AND ATTORNEY'S FEES.

LOBBYIST ORDINANCE CERTIFICATION

[Complete this section for permits in unincorporated Los Angeles County only]

This is to certify that I, as permit applicant, am familiar with the requirements of Los Angeles County Code Chapter 2.160 et seq., (relating to the Los Angeles County Lobbyist Ordinance) and that all persons acting on behalf of myself complied and will continue to comply therewith through the application process.

Applicant (Print Name) _____ Applicant Signature _____

Dia-Tech

Company Name (if employed by an entity/agency) _____ Date _____

JOB ADDRESS
LOCALITY

HAZARDOUS MATERIAL DECLARATION

Will the applicant or future building occupant handle a hazardous material or a mixture containing a hazardous material equal to or greater than the amount specified on the hazardous materials information guide?

Yes ☐ No ☐

Will the intended use of the building by the applicant or future building occupant require a permit for construction or modification from the South Coast Air Quality Management District (SCAQMD)? See permitting checklist for guidelines.

Yes ☐ No ☐

I have read the hazardous materials information guide and the SCAQMD permitting checklist, I understand my requirements under the Los Angeles County Code Title 2, Chapter 220 Sections 220.100 through 220.140 concerning hazardous material reporting and for obtaining a permit from the SCAQMD.

ASBESTOS NOTIFICATION

☐ Notification letter sent to SCAQMD or EPA

☐ I declare that notification of asbestos removal is not applicable to addressed project.

CONSTRUCTION LENDING AGENCY

I hereby affirm under penalty of perjury that there is a construction lending agency for the performance of the work for which this permit is issued (Sec. 3097, Civ.C.).

Lender's Name _____

Lender's Address _____

I certify that I have read this application and state under the penalty of perjury that the above information is correct. I agree to comply with all City and County ordinances and State laws relating to building construction, and hereby authorize representatives of this County to enter upon the above-mentioned property for inspection purposes.

Applicant or Agent Signature _____ **Date** _____

COUNTY OF LOS ANGELES
DEPARTMENT OF PUBLIC WORKS
BUILDING AND SAFETY / LAND DEVELOPMENT

FIRESTONE
7807 COMPTON
LOS ANGELES CA 90001
PHONE: (323) 586-6541 EXT:

0100

PLUMBING PERMIT
PL 0100 0309080018

LEGAL ID:
ON FILE

ASSESSOR INFORMATION NUMBER:
6008-031-028

TENANT:
MOM'S 99

OWNER: TEL. NO:
MERONO ENTERPRISES (714) 943-0149-
9550 FIRESTONE
LOSA 90006

APPLICANT: TEL. NO:
DIA-TECK (213) 700-4796-
943 S ARAPAHOE ST105
LOSA 90006

CONTRACTOR: TEL. NO:
DIA-TECK (909) 860-8226-
1755 LEANING PINE DR. LIC. NO
DIAMOND BAR, CA 91765 659066 C20

ARCHITECT OR ENGINEER: TEL. NO:
-
LIC. NO:

FEES PAID

FEE DESCRIPTION:	QUANTITY: UOM:	AMOUNT:
01 PERMIT ISSUANCE FEE		22.00
25 LAVATORIES / SINKS	1.00 FIX	12.90
47 WATER HEATER(S)	1.00 WTH	12.90
	TOTAL FEES	47.80

REPORT ID: DPR263 ROUTE TO: BS0100

BUILDING ADDRESS:
1423 GAGE AV E BLDG. B
LOSA CA 900011259
NEAREST CROSS STREET: COMPTON
THOMAS PAGE: 674 GRID: F6 LOCALITY: FIRESTONE

ISSUED ON:	PROCESSED BY:	PLAN BY:	EXPIRES ON:
09/08/03	HG		03/06/04

FINAL DATE	FINAL BY:	CODE:
11/6/03	W CHATMAN	

DESCRIPTION OF WORK
PLUMBING PERMIT, (MOP SINK). 99¢ STORE

SPECIAL CONDITIONS:

APPROVALS	DATE	INSPECTOR SIGNATURE
UNDER SLAB WORK		
WATER SERVICE PLASTIC Y/N METAL Y/N		
ROUGH PLUMBING		
GAS PIPING		
GAS VENT		
HOT WATER HEATER		
PLUMBING FIXTURES		
LAWN SPRINKLERS		
GAS TEST		
UTILITY COMPANY NOTIFIED		
CWV		
GRAY WATER SYSTEM		

LICENSED CONTRACTOR'S DECLARATION

I hereby affirm under penalty of perjury that I am licensed under provisions of Chapter 9 (commencing with Section 7000) of Division 3 of the Business and Professions Code, and my license is in full force and effect.

License Class C-36 C-10 Lic. No. 659066

Contractor's Signature Date 9/10/03

OWNER-BUILDER DECLARATION

I hereby affirm under penalty of perjury that I am exempt from the Contractors License Law for the following reason (Sec. 7031.5, Business and Professions Code: Any city or county which requires a permit to construct, alter, improve, demolish, or repair any structure, prior to its issuance, also requires the applicant for such permit to file a signed statement that he or she is licensed pursuant to the provisions of the Contractors License Law (Chapter 9 (commencing with Section 7000) of Division 3 of the Business and Professions Code) or that he or she is exempt therefrom and the basis for the alleged exemption. Any violation of Section 7031.5 by any applicant for a permit subjects the applicant to a civil penalty of not more than five hundred dollars ($500).):

☐ I am exempt under Sec. _____ , B.& P.C. for this reason:

_____

_____

[Electrical, Plumbing & Sewer Permits Only]

☐ I, as owner of the property, will do the work, and the structure is not intended or offered for sale (Sec. 7044, Business and Professions Code: The Contractors License Law does not apply to an owner of property who builds or improves thereon, and who does such work himself or herself, provided that such improvements are not intended or offered for sale. If, however, the building or improvement is sold within one year of completion, the owner-builder will have the burden of proving that he or she did not build or improve for the purpose of sale.).

[All Other Permits]

☐ I, as owner of the property, or my employees with wages as their sole compensation, will do the work, and the structure is not intended or offered for sale (Sec. 7044, Business and Professions Code: The Contractors License Law does not apply to an owner of property who builds or improves thereon, and who does such work himself or herself or through his or her own employees, provided that such improvements are not intended or offered for sale. If, however, the building or improvement is sold within one year of completion, the owner-builder will have the burden of proving that he or she did not build or improve for the purpose of sale.).

☐ I, as owner of the property, am exclusively contracting with licensed contractors to construct the project (Sec. 7044, Business and Professions Code: The Contractors License Law does not apply to an owner of property who builds or improves thereon, and who contracts for such projects with a contractor(s) licensed pursuant to the Contractors License Law.).

Owner Signature _____ Date _____

WORKER'S COMPENSATION DECLARATION

I hereby affirm under penalty of perjury one of the following declarations:

☐ I have and will maintain a certificate of consent to self-insure for worker's compensation, as provided for by Section 3700 of the Labor Code, for the performance of the work for which this permit is issued.

☐ I have and will maintain worker's compensation insurance, as required by Section 3700 of the Labor Code, for the performance of the work for which this permit is issued. My worker's compensation insurance carrier and policy number are:

Carrier _____

Policy Number _____

☐ I certify that in the performance of the work for which this permit is issued, I shall not employ any person in any manner so as to become subject to the worker's compensation laws of California, and agree that if I should become subject to the worker's compensation provisions of Section 3700 of the Labor Code, I shall forthwith comply with those provisions.

Applicant Signature _____ Date _____

WARNING: FAILURE TO SECURE WORKER'S COMPENSATION COVERAGE IS UNLAWFUL, AND SHALL SUBJECT AN EMPLOYER TO CRIMINAL PENALTIES AND CIVIL FINES UP TO ONE HUNDRED THOUSAND DOLLARS ($100,000), IN ADDITION TO THE COST OF COMPENSATION, DAMAGES AS PROVIDED FOR IN SECTION 3706 OF THE LABOR CODE, INTEREST, AND ATTORNEY'S FEES.

LOBBYIST ORDINANCE CERTIFICATION

[Complete this section for permits in unincorporated Los Angeles County only]

This is to certify that I, as permit applicant, am familiar with the requirements of Los Angeles County Code Chapter 2.160 et seq., (relating to the Los Angeles County Lobbyist Ordinance) and that all persons acting on behalf of myself complied and will continue to comply therewith through the application process.

Kevin Doyle

Applicant (Print Name) Applicant Signature

Dia-Tech 9/9/03

Company Name (if employed by an entity/agency) Date

JOB ADDRESS
LOCALITY

HAZARDOUS MATERIAL DECLARATION

Will the applicant or future building occupant handle a hazardous material or a mixture containing a hazardous material equal to or greater than the amount specified on the hazardous materials information guide?

Yes ☐ No ☐

Will the intended use of the building by the applicant or future building occupant require a permit for construction or modification from the South Coast Air Quality Management District (SCAQMD)? See permitting checklist for guidelines.

Yes ☐ No ☐

I have read the hazardous materials information guide and the SCAQMD permitting checklist, I understand my requirements under the Los Angeles County Code Title 2, Chapter 220 Sections 220.100 through 220.140 concerning hazardous material reporting and for obtaining a permit from the SCAQMD.

ASBESTOS NOTIFICATION

☐ Notification letter sent to SCAQMD or EPA

☐ I declare that notification of asbestos removal is not applicable to addressed project.

CONSTRUCTION LENDING AGENCY

I hereby affirm under penalty of perjury that there is a construction lending agency for the performance of the work for which this permit is issued (Sec. 3097, Civ.C.).

Lender's Name _____

Lender's Address _____

I certify that I have read this application and state under the penalty of perjury that the above information is correct. I agree to comply with all City and County ordinances and State laws relating to building construction, and hereby authorize representatives of this County to enter upon the above-mentioned property for inspection purposes.

Applicant or Agent Signature _____ **Date** _____

WALL UNIT 7FT HIGH X 4 FT (48" WIDTH)
(84")

FLOOR GONDOLA 4 FT HIGH X 4 FT (48" WIDTH)
(48")

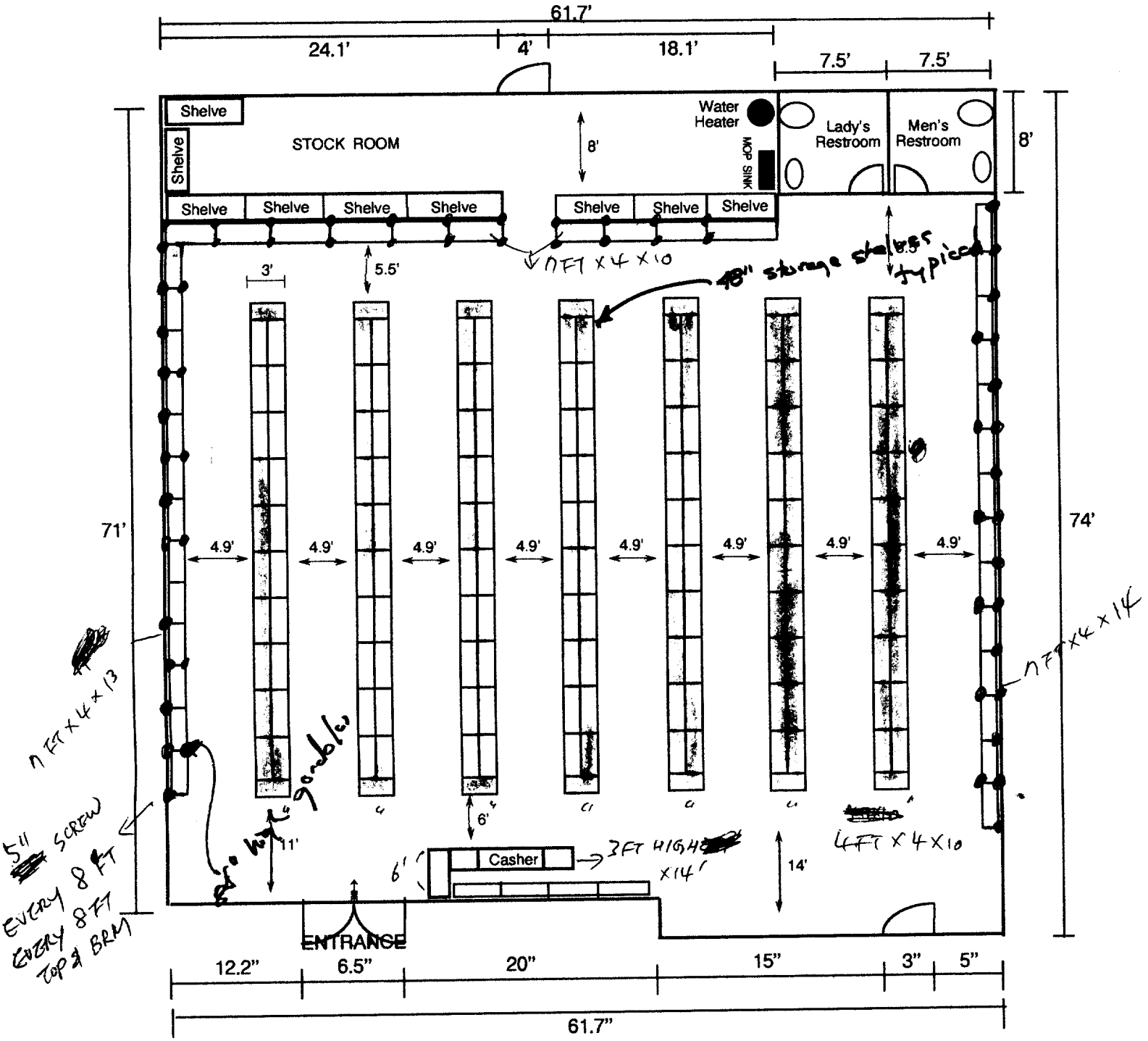

CONST. SUBJECT TO FIELD INSPECTION; NO PLAN REQUIRED

V. Moss 10/20/07

Mom's Bargain(99¢)
1423-B, E. Gage Ave., Los Angeles, CA 90001
(Gage+Compton Corner)
Tel. (323) ~~538~~-0492, C.P. (818)314-2839
583

GONDOLAS

DISPLAY POWER PANEL

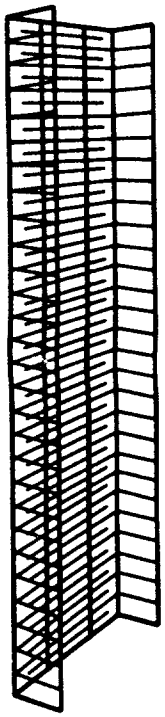

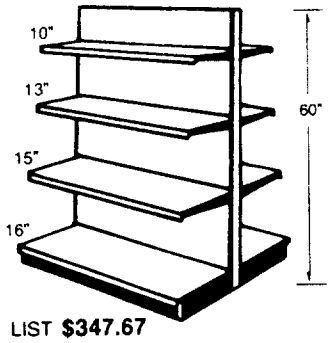

LIST **$347.67**
NET **$243.37**

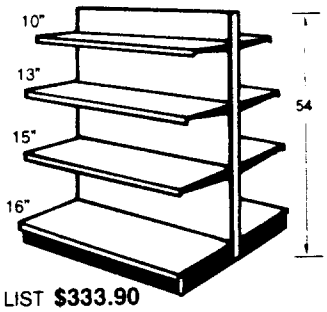

LIST **$333.90**
NET **$233.73**

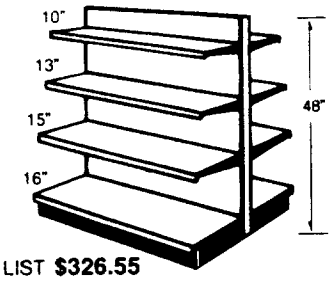

LIST **$326.55**
NET **$228.58**

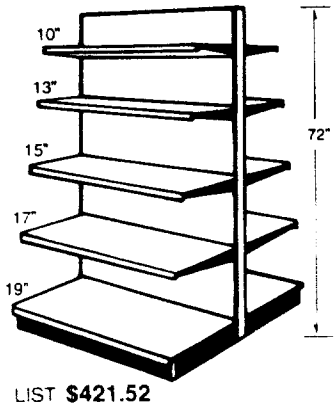

LIST **$421.52**
NET **$295.06**

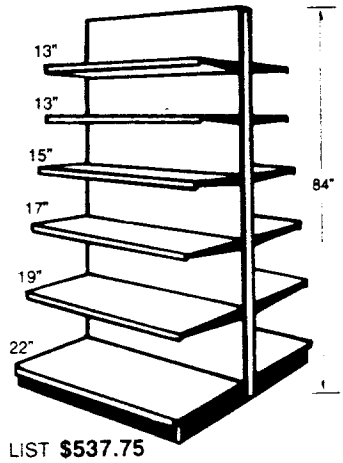

LIST **$537.75**
NET **$376.42**

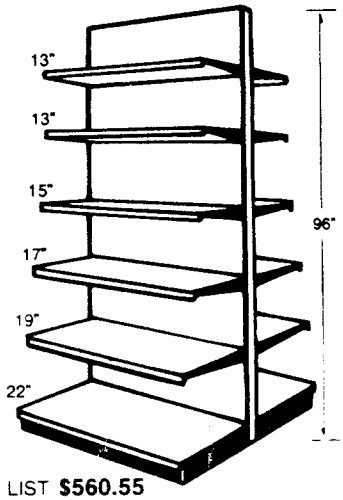

LIST **$560.55**
NET **$392.38**

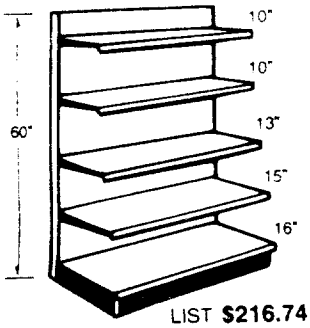

LIST **$216.74**
NET **$151.72**

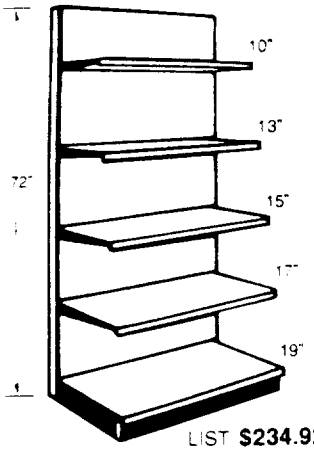

LIST **$234.92**
NET **$164.44**

GONDOLA

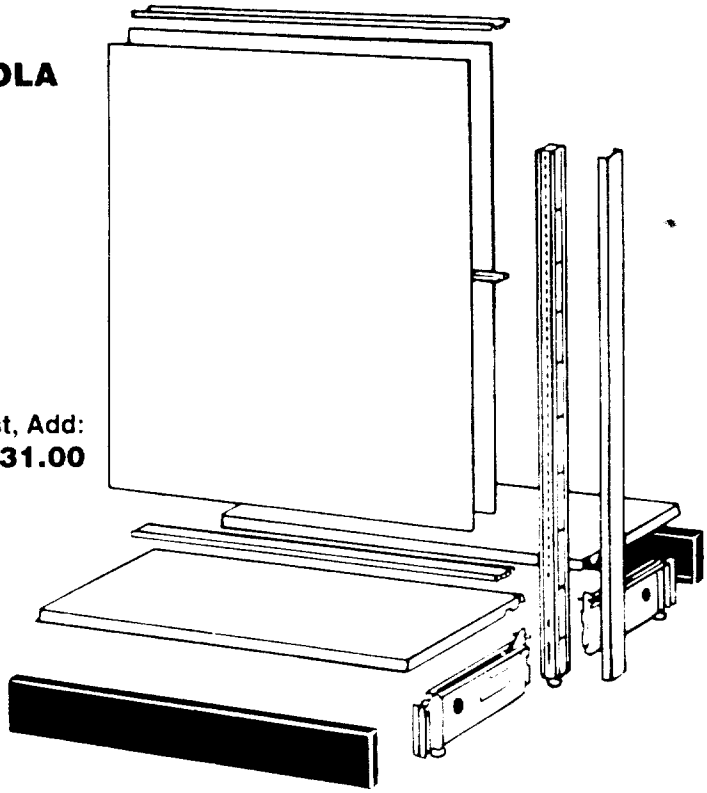

Complete End Post, Add:
$31.00

Merona
ENTERPRISES, INC.

October 22, 2003

Los Angeles County
Department of Building and Safety

Re: 1423 Gage Avenue, Unit B
Los Angeles, CA

To Whom It May Concern:

Merona Enterprises, Inc., (Owner of the above referenced property) hereby gives consent to Mr. or Mrs. Ko, Tenant doing business as Mom's Bargain, to complete his required tenant improvements and signage at the shopping center, subject to applicable building codes and Lease provisions.

If you have any questions, please call.

Sincerely,

Mark Tarlov
Vice President

9550 FIRESTONE BLVD., SUITE 105, DOWNEY CA 90241 * PHONE: (562) 862-4360 * FAX: (562) 862-7919

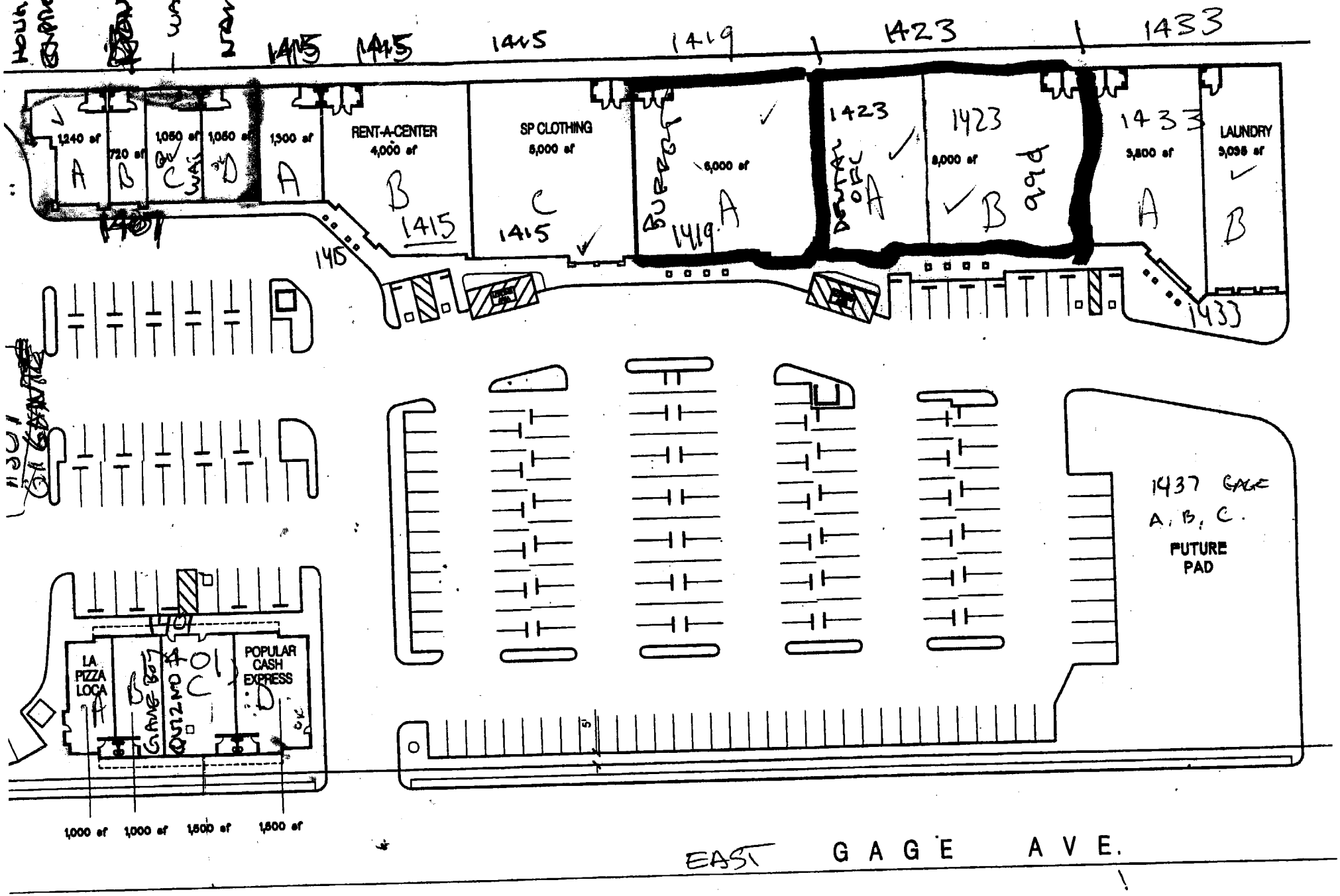
1415
1419
1423
1433
1,240 sf
720 sf
1,050 sf
1,050 sf
1,500 sf
RENT-A-CENTER
4,000 sf
SP CLOTHING
5,000 sf
6,000 sf
1423
8,000 sf
1433
3,800 sf
LAUNDRY
3,098 sf
1437 GAGE
A, B, C.
FUTURE
PAD
LA
PIZZA
LOCA
POPULAR
CASH
EXPRESS
1,000 sf
1,000 sf
1,500 sf
1,500 sf
EAST GAGE AVE.