1505 FIRESTONE BL

COUNTY OF LOS ANGELES
DEPARTMENT OF PUBLIC WORKS
BUILDING AND SAFETY / LAND DEVELOPMENT

FIRESTONE # 0100
7807 COMPTON
LOS ANGELES CA 90001
PHONE: (323) 586-6541 EXT:

MISCELLANEOUS PERMIT
MP 0100 0410180001

LEGAL ID:
IN FILE

ASSESSOR INFORMATION NUMBER:
6028-034-016

TENANT:

OWNER: TEL. NO:
KIM KAP P;CHUNG S -

LOSA 900510034

APPLICANT: TEL. NO:
PYRAMID 1 CONSTRUCTION (323) 974-4993-
3939 SNOW DR
LOS ANGELES CA 90063

CONTRACTOR: TEL. NO:
PYRAMID 1 CONSTRUCTION (323) 974-4993-
3939 SNOW DR LIC. NO
LOS ANGELES CA 90063 826490 B

ARCHITECT OR ENGINEER: TEL. NO:
-
LIC. NO:

MAP NO: SEWER MAP BOOK: PAGE: FIRE ZONE: CMP:

NO. OF FAMILIES: DWELLING UNITS: APT/COND: STAT CLASS:
NO

AIR QUALITY: NO
SCHOOL WITHIN 1000 FEET: NO
HAZARDOUS MATERIALS: NO

REQUIRED SET BACK YARD: HWY: TOTAL SETBACK FROM PROP LINE: EXIST WIDTH:
FRONT PL-
SIDE PL-

	SQ. FT	NO. OF STORIES	CONST TYPE	NEW OCCUP GROUP
STRUCTURE:		0	VN	R3

EXIST BLDG USE:
EXIST OCC GRP: USE ZONE:

BLDGS. NOW ON LOT: VALUATION:
0

LIST ITEMS:

OCCUP LOAD EXIST:
OCCUP LOAD NEW:

PARKING SPACES REQUIRED:
PARKING SPACES PROVIDED:

EXIT HARDWARE:

NBR OF EXITS:

FEES PAID

FEE DESCRIPTION:	QUANTITY: UOM:	AMOUNT:
0A PERMIT ISSUANCE		22.40
1J INSPECTIONS OTHER	1.00 HOU	79.10
TOTAL FEES		101.50

EXPIRED
DUE TO TIME LIMITATION
APPLICANT NOTIFIED
By Royce Date SEP 14 2006

REPORT ID: DPR267 ROUTE TO: BS0100

BUILDING ADDRESS:
1505 FIRESTONE BL
LOSA CA 900013923
NEAREST CROSS STREET: COMPTON
THOMAS PAGE: 704 GRID: F2 LOCALITY: LOS ANGELES

ISSUED ON: 10/18/04 PROCESSED BY: ES EXPIRES ON: 04/16/05

FINAL DATE FINAL BY: CODE:

DESCRIPTION OF WORK
PRE-INSPECTION (1 HOUR) FIRE DAMAGE.

SPECIAL CONDITIONS:

LIMITED TIME USE
FROM TO

APPROVALS	DATE	INSPECTOR SIGNATURE
TRAILER USE		
SAFETY PERMIT		
TEMP. STRUCT. APPROVED		
TEMP. STRUCT. REMOVED		

LICENSED CONTRACTOR'S DECLARATION

I hereby affirm under penalty of perjury that I am licensed under provisions of Chapter 9 (commencing with Section 7000) of Division 3 of the Business and Professions Code, and my license is in full force and effect.

License Class B Lic. No. 826490

Contractor's Signature Date 10-18-04

OWNER-BUILDER DECLARATION

I hereby affirm under penalty of perjury that I am exempt from the Contractors License Law for the following reason (Sec. 7031.5, Business and Professions Code: Any city or county which requires a permit to construct, alter, improve, demolish, or repair any structure, prior to its issuance, also requires the applicant for such permit to file a signed statement that he or she is licensed pursuant to the provisions of the Contractors License Law (Chapter 9 (commencing with Section 7000) of Division 3 of the Business and Professions Code) or that he or she is exempt therefrom and the basis for the alleged exemption. Any violation of Section 7031.5 by any applicant for a permit subjects the applicant to a civil penalty of not more than five hundred dollars ($500).):

☐ I am exempt under Sec. _____ , B.& P.C. for this reason:

_____

_____

[Electrical, Plumbing & Sewer Permits Only]

☐ I, as owner of the property, will do the work, and the structure is not intended or offered for sale (Sec. 7044, Business and Professions Code: The Contractors License Law does not apply to an owner of property who builds or improves thereon, and who does such work himself or herself, provided that such improvements are not intended or offered for sale. If, however, the building or improvement is sold within one year of completion, the owner-builder will have the burden of proving that he or she did not build or improve for the purpose of sale.).

[All Other Permits]

☐ I, as owner of the property, or my employees with wages as their sole compensation, will do the work, and the structure is not intended or offered for sale (Sec. 7044, Business and Professions Code: The Contractors License Law does not apply to an owner of property who builds or improves thereon, and who does such work himself or herself or through his or her own employees, provided that such improvements are not intended or offered for sale. If, however, the building or improvement is sold within one year of completion, the owner-builder will have the burden of proving that he or she did not build or improve for the purpose of sale.).

☐ I, as owner of the property, am exclusively contracting with licensed contractors to construct the project (Sec. 7044, Business and Professions Code: The Contractors License Law does not apply to an owner of property who builds or improves thereon, and who contracts for such projects with a contractor(s) licensed pursuant to the Contractors License Law.).

Owner Signature Date

WORKER'S COMPENSATION DECLARATION

I hereby affirm under penalty of perjury one of the following declarations:

☐ I have and will maintain a certificate of consent to self-insure for worker's compensation, as provided for by Section 3700 of the Labor Code, for the performance of the work for which this permit is issued.

☐ I have and will maintain worker's compensation insurance, as required by Section 3700 of the Labor Code, for the performance of the work for which this permit is issued. My worker's compensation insurance carrier and policy number are:

Carrier _____

Policy Number _____

☐ I certify that in the performance of the work for which this permit is issued, I shall not employ any person in any manner so as to become subject to the worker's compensation laws of California, and agree that if I should become subject to the worker's compensation provisions of Section 3700 of the Labor Code, I shall forthwith comply with those provisions.

Applicant Signature Date

WARNING: FAILURE TO SECURE WORKER'S COMPENSATION COVERAGE IS UNLAWFUL, AND SHALL SUBJECT AN EMPLOYER TO CRIMINAL PENALTIES AND CIVIL FINES UP TO ONE HUNDRED THOUSAND DOLLARS ($100,000), IN ADDITION TO THE COST OF COMPENSATION, DAMAGES AS PROVIDED FOR IN SECTION 3706 OF THE LABOR CODE, INTEREST, AND ATTORNEY'S FEES.

LOBBYIST ORDINANCE CERTIFICATION

[Complete this section for permits in unincorporated Los Angeles County only]

This is to certify that I, as permit applicant, am familiar with the requirements of Los Angeles County Code Chapter 2.160 et seq., (relating to the Los Angeles County Lobbyist Ordinance) and that all persons acting on behalf of myself complied and will continue to comply therewith through the application process.

Daniel Rodriguez
Applicant (Print Name) Applicant Signature

Pyramid Construction 10-18-04
Company Name (if employed by an entity/agency) Date

JOB ADDRESS
LOCALITY

HAZARDOUS MATERIAL DECLARATION

Will the applicant or future building occupant handle a hazardous material or a mixture containing a hazardous material equal to or greater than the amount specified on the hazardous materials information guide?

Yes ☐ No ☐

Will the intended use of the building by the applicant or future building occupant require a permit for construction or modification from the South Coast Air Quality Management District (SCAQMD)? See permitting checklist for guidelines.

Yes ☐ No ☐

I have read the hazardous materials information guide and the SCAQMD permitting checklist, I understand my requirements under the Los Angeles County Code Title 2, Chapter 220 Sections 220.100 through 220.140 concerning hazardous material reporting and for obtaining a permit from the SCAQMD.

ASBESTOS NOTIFICATION

☐ Notification letter sent to SCAQMD or EPA

☐ I declare that notification of asbestos removal is not applicable to addressed project.

CONSTRUCTION LENDING AGENCY

I hereby affirm under penalty of perjury that there is a construction lending agency for the performance of the work for which this permit is issued (Sec. 3097, Civ.C.).

Lender's Name _____

Lender's Address _____

I certify that I have read this application and state under the penalty of perjury that the above information is correct. I agree to comply with all City and County ordinances and State laws relating to building construction, and hereby authorize representatives of this County to enter upon the above-mentioned property for inspection purposes.

Applicant or Agent Signature **Date** 10-18-04

MetroScan / L.A. Full County (CA)

Owner	: Kim Kap P;Chung S			*Parcel*	: 6028 034 016
CoOwner	:			*Land*	: $26,084
Site	: 1501 Firestone Blvd Los Angeles 90001			*Struct*	: $54,921
Mail	: PO Box 512034 Los Angeles Ca 90051			*Other*	:
Xfered	: 12/23/1986			*Total*	: $81,005
Price	: $300,000	*Doc#*	:	*% Imprvd*	: 68
Lender	:	*Deed*	:	*% Owned*	:
Loan Amt	:	*Loan*	:	*Exempt*	:
VestType	:	*IntTyp*	:	*Type*	: Other
Use	: 1210 Com,Store And Res Combination			*TaxArea*	: 01198
Zoning	: C3lc			04-05 *Tx*	: $2,155.17
Sub/Plat	: Nadeau Homestead Tract			*OwnerPh*	:
Legal	: NADEAU HOMESTEAD TRACT EX OF ST LOT			*TenantPh*	:
Census	: *Tract*: 5351.02 *Block*: 1			*MapGrid*	: 704 F2

Bedrooms	: 1	*Bldg Sq Ft*	: 2,524	*Lot Acres*	: .09
Bathrooms	: 1.00	*Bldg Class*	: 5.5	*Lot Sq Ft*	: 4,186
Living Rm	:	*Bldg Cond*	: 5.5	*Air Method*	:
Fireplace	:	*Bldg Grade*	: Good	*HeatMethod*	:
Patio	:	*Bldg Style*	:	*Roof Matl*	:
Pool	:	*Qlty Class*	: D	*Hill Slope*	:
Stories	:	*Garage Sp*	:	*View*	:
Units	: 1	*GarageType*	:	*Year Built*	: 1924

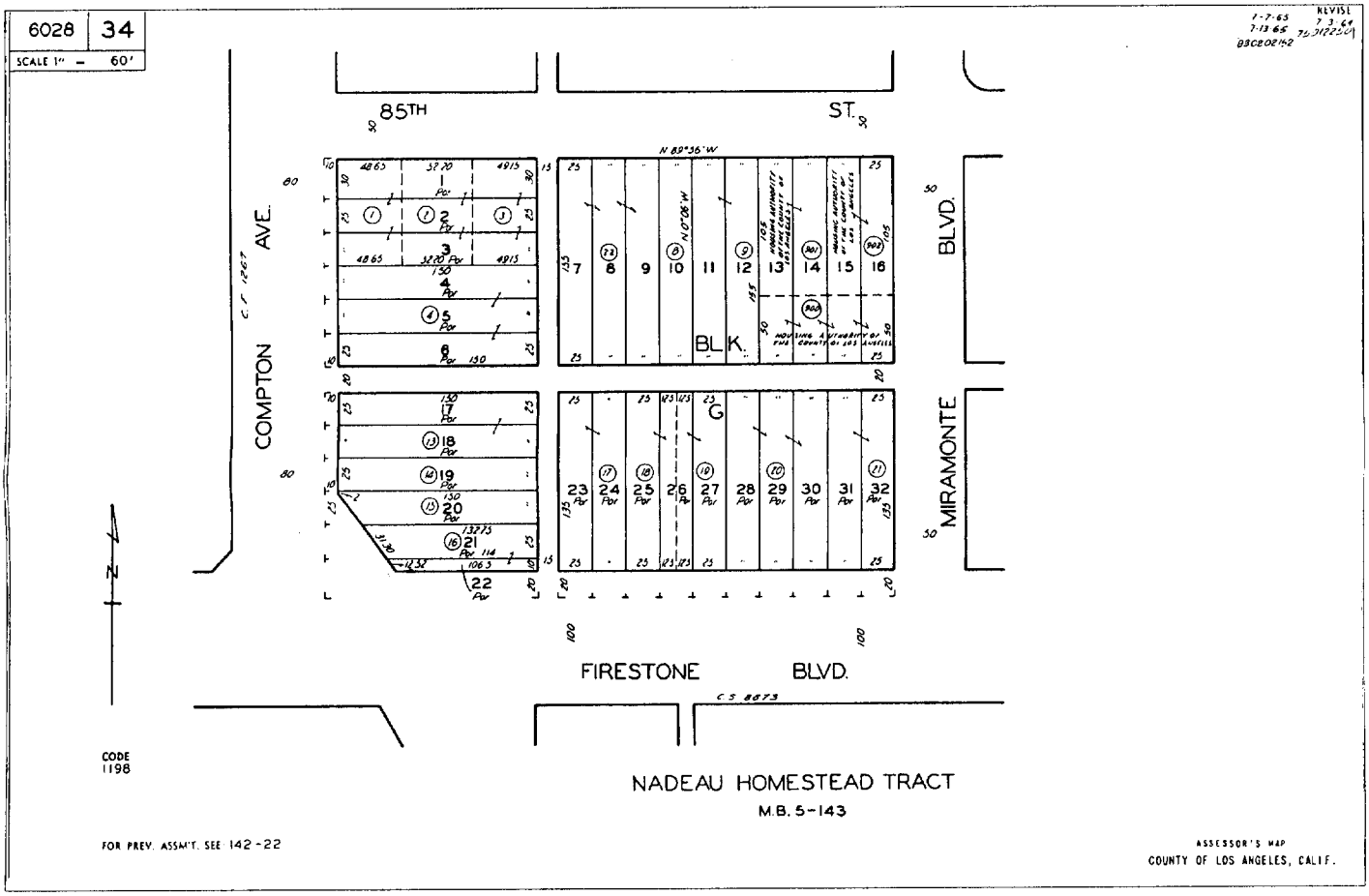

Information compiled from various sources. Real Estate Solutions makes no representations or warranties as to the accuracy or completeness of information contained in this report.

TYPE= LD **ASSR ID NO=** 6028 034 016 **SBN NO =**

FILE NO= 47 **UPDATE=** 12/26/04 **DATE=** 12/29/04

ASSR ID NO		VC	REC DT	TRF PRICE	# DOC NO	OC1	OC2	DT	INT	DRC
6028 034 016 6	**CURRENT:**	M	861223-50	300000	4 1785824	3	5	Y	00%-0	A
	SALE 1:	4	741205-50	37500					00%-0	
	SALE 2:	1	660617-50	999999999						

REG	CC	USE
26	26604	1210

PARCEL STATUS	TS	TY	SCP	TRA	HOX KEY	HOX AMT	CLAIM TYPE	REX AMOUNT
ACTIVE	0			01198	N		INACTIVE	

NAME **PCL CRT DT**

KIM,KAP P AND CHUNG S

SPECIAL NAME: NO SPECIAL NAME ON FILE **PCL DEL DT**

SITUS ADDRESS

1501 FIRESTONE BLVD LOS ANGELES CA

MAIL ADDRESS 90001 3923

P O BOX 512034 LOS ANGELES CA

.. L E G A L D E S C R I P T I O N ... 90051-0034

NADEAU HOMESTEAD TRACT EX OF ST LOT 21 **NUMBER OF**

AND EX OF STS LOT 22 BLK G **LEGAL DESCRIPTION LINES** 2

PF1 = INQ SEL; 6 = NEWS; 9 = ACCUM TXN; 10 = MENU; 11 = EXIT

TYPE= BD **ASSR ID NO=** 6028 034 016 **SBN NO =**
FILE NO= 47 **UPDATE=** 12/26/04 **DATE=** 12/29/04

ASSR ID NO	REG	CC	USE	ZONE	VC	REC DT	TRF PRICE	#	OC1	OC2	DT	INT	DRC
6028 034 016	6	26	26604	1210	LCC3	M 861223-50	300000	4	3	5	Y	00%-0	A

NAME-SITUS ADDRESS
KIM,KAP P AND CHUNG S

1501 FIRESTONE BLVD
LOS ANGELES CA 90001-3923

SUBPART KEY	DESIGN TYPE	CLASS	YR BLT	EFF YR	NO OF UNITS	NO OF BDRMS	NO OF BATHS	SQ FT MAIN	COMPOSITE SQUARE FT
0102	1210	D55A	1924	1924	1	1	1	2317	
0202	2100	D5	1929	1935				207	

TOTAL UNITS	TOTAL SQ FT	TRF PRICE PER UNIT	TRF PRICE PER SQ FT	AVG SQ FT PER UNIT		BASE VALUE	PC	RC	BY
1	2524	300000	118	2524	LAND	19000		T	87
					IMP	40000		T	87
LAND WIDTH	LAND DEPTH	USABLE SQ FT	ACRES		TOTAL	59000			
		4186							

PF1 = INQ SEL; 6 = NEWS; 9 = ACCUM TXN; 10 = MENU; 11 = EXIT

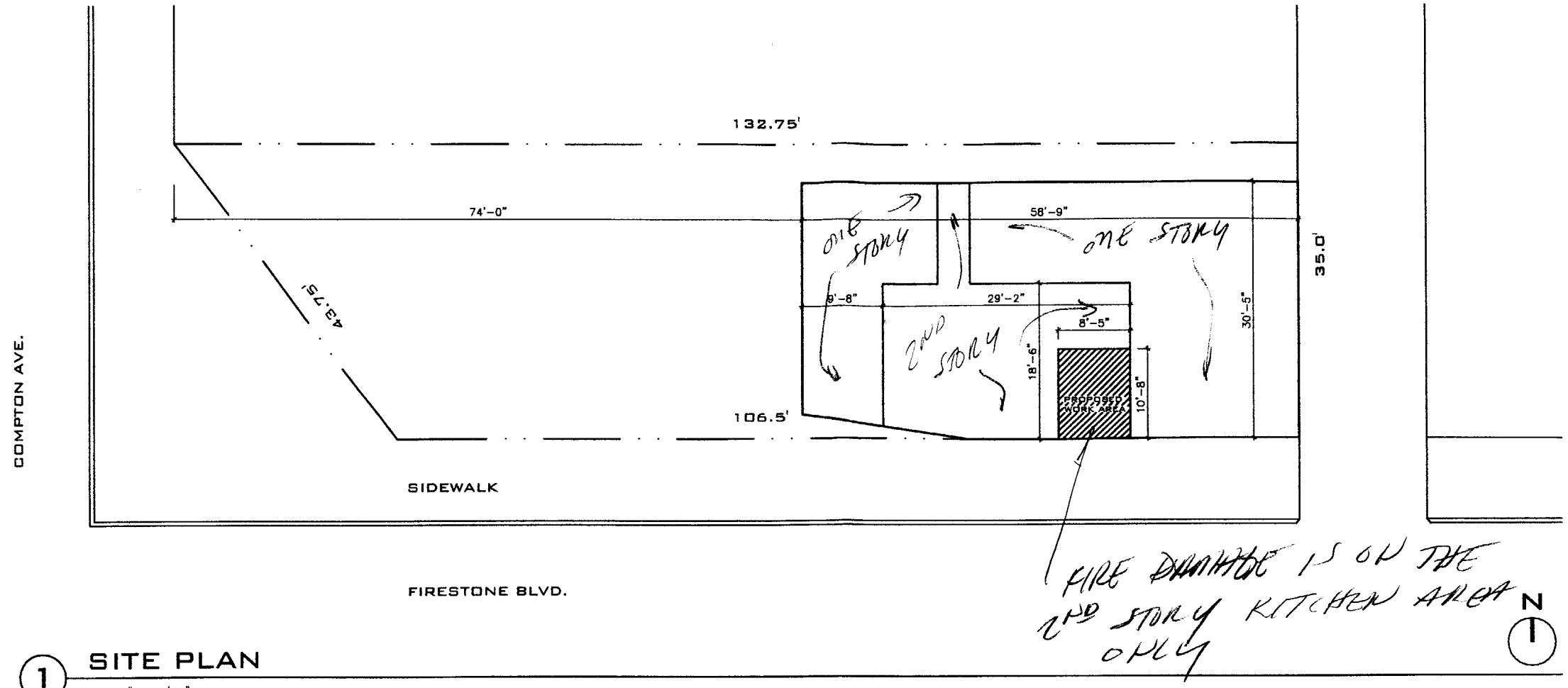

1 SITE PLAN
1/16" = 1'-0"

VICINITY MAP

PROJECT INFORMATION

ADDRRESS	1501 FIRESTONE BLVD LOS ANGELES CA 90001
LEGAL DESCRIPTION	TRACT: NADEAU HOMESTEAD BLOCK: G LOT: 21 & EX OF STS LOT 22
ASSESSORS PARCEL NUMBER:	6028 - 034 - 016
LOT SIZE:	106' - 6" x 35' - 0' + 43' - 9" x 35' - 0" / 2
LOT AREA:	4187 SF
EXISTING USE:	COMMERCIAL + RESIDENTIAL
CONSTRUCTION:	TYPE V-N
DESCRIPTION OF WORK:	UNIT REMODELING. REMOVE AND REPLACE DAMAGED CEILING JOIST, DRYWALL, AND FLOOR FINISH
BUILDING AREA:	EXISTING TO REMAIN

BUILDING CODE REGULATIONS

APPLICABLE CODES	
PLANNING & ZONING:	CITY OF LOS ANGELES
BUILDING & SAFETY:	2001 EDITION OF THE CALIFORNIA BUILDING CODE (TITLE 24) 1997 UNIFORM BUILDING CODE
MECHANICAL:	2001 CALIFORNIA MECHANICAL CODE
PLUMBING:	2001 CALIFORNIA PLUMBING CODE

SHEET INDEX

T - 1.1	PROJECT INFORMATION + SITE PLAN
T - 1.2	GENERAL NOTES
A - 1.0	EXISTING PLAN + PROPOSED WORK
A - 2.0	BUILDING SECTIONS + DETAILS

REVISION	DATE

PROJ. INFO

FIRESTONE KITCHEN REPAIR
1501 FIRESTONE BLVD, LOS ANGELES CA 90001

DRAWN
CHECKED
DATE DEC. 2004
PROJECT NO.

T-1.1

GENERAL NOTES

1. ALL WORK TO BE DONE IN ACCORDANCE WITH THE UNIFORM BUILDING CODE UNIFORM 1997 ED., MECHANICAL CODE, UNIFORM PLUMBING CODE, NATIONAL ELECTRICAL CODE AND LOCAL ORDINANCES.

2. WORK INCLUDED : THIS PROJECT CONSISTS OF REMODELING OF EXISTING BUILDING AS INDICATED ON THE DRAWINGS AND AS HEREIN SPECIFIED: TO THE END THAT THE BUILDING SHALL BE COMPLETELY OPERABLE ON COMPLETION OF THE CONTRACT.

3. SPECIAL NOTICE : THE COMPETENCE AND RESPONSIBILITY OF CONTRACTOR AND THEIR SUB-CONTRACTORS WILL BE CONSIDERED IN AWARDING THE CONTRACT OWNER RESERVES THE RIGHT TO REJECT ANY AND ALL BIDS AND WAIVE ALL FORMALITY IN CONNECTION THEREWITH.

4. SPECIAL NOTICE : THE COMPETENCE AND RESPONSIBILITY OF CONTRACTOR AND THEIR CONDITIONS : THE FOLLOWING CONDITIONS ARE HEREBY MADE A PART OF AND SHALL APPLY TO THE WORK OF EVERY DIVISION, SECTION AND SUBSECTION OF THESE SPECIFICATIONS.

5. SCOPE : FURNISH ALL LABOR, MATERIALS, EQUIPMENT, APPLIANCES AND SERVICES NECESSARY FOR THE EXECUTION AND COMPLETION OF THE WORK OF EACH DIVISION OR SECTION AS INDICATED ON DRAWINGS OR AS SPECIFIED IN AN OPERABLE AND LAWFUL MANNER.

6. IT SHALL BE THE CONTRACTOR'S RESPONSIBILITY TO VERIFY ALL DIMENSIONS AND CONDITIONS OF THE EXISTING PROPERTY AT THE PROJECT SITE AND TO CROSS CHECK ALL DETAILS AND NOTIFY THE OWNER AND THE ARCHITECT OF ANY DISCREPANCIES BEFORE STARTING ANY WORK.

7. ANY DEVIATIONS FROM THE CONTRACT DOCUMENTS THAT ARE NECESSITATED BY FIELD CONDITIONS SHALL BE BROUGHT TO THE ATTENTION OF THE OWNER AND THE ARCHITECT.

8. ALL WORKMANSHIP AND MATERIALS SHALL CONFORM TO THE LATEST EDITION OF GOVERNING BUILDING CODE AND/OR ALL OTHER GOVERNING CODES AND AGENCIES' REQUIREMENTS.

9. SITE EXAMINATION : ALL CONTRACTORS SUBMITTING PROPOSALS FOR THIS WORK SHALL FIRST VISIT AND EXAMINE THE PROJECT SITE, EXISTING BUILDING AND ALL EXISTING CONDITIONS THEREIN; AND SHALL TAKE THEM INTO ACCOUNT IN THEIR PROPOSAL.

10. PERMITS AND TAXES : SECURE AND PAY FOR ALL PERMITS, WATER, SEWER HOOK-UPS AND ANY OTHER MUNICIPAL OR PRIVATE FEES REGARDING THE WORK, INCLUDING WATER METER AND COSTS REQUIRED BY UTILITIES TO RUN MAINS ON AND OFF THE PROPERTY.

11. SUBMITTALS : WITHIN 15 DAYS AFTER THE AWARD OF CONTRACT AND BEFORE ANY MATERIALS ARE DELIVERED TO JOB SITE, SUBMIT CONSTRUCTION SCHEDULE & PHASING OF THE WORK FOR OWNER'S REVIEW SHOP DRAWINGS (3 SETS), SAMPLES, AND/OR COMPLETE LIST OF ALL MATERIALS PROPOSED TO BE FURNISHED AND INSTALLED UNDER THE WORK OF EACH DIVISION THAT REQUEST THEM. PROVIDE THE OWNER WITH 3 SETS OF OPERATING AND MAINTENANCE INSTRUCTION FOR ALL EQUIPMENT INSTALLED AT COMPLETION OF WORK.

12. FLOOR FINISH JUNCTIONS : SHALL BE TRUE AND LEVEL. ALL FINISH FLOOR HEIGHT VARIATIONS SHALL BE CORRECTED BY LEVELING OR BY AN APPROVED EVEN RAMP WITH MAXIMUM SLOPE OF 10% IN ALL TRAVELLED DIRECTIONS. STEPS SHALL NOT BE PERMITTED UNLESS INDICATED ON THE DRAWINGS.

13. PROTECTION : COMPLY WITH O.S.H.A. AND ALL GOVERNING HEALTH AND SAFETY CODES. PROVIDE PROTECTION FOR ALL PROPERTY, NEW AND EXISTING WORK AND ALL MATERIALS STORED ON THE JOB SITE AGAINST LESS AND/OR DAMAGE, INCLUDING WIND AND EARTHQUAKE DAMAGE AND PROTECTION FOR ALL PERSONS AGAINST INJURIES DURING CONSTRUCTION.

14. TEMPORARY PHONE & FACILITIES : PROVIDE AT HIS EXPENSE JOB PHONES AND TOILETS, TEMPORARY POWER & WATER. THE CONTRACTOR TO PROVIDE HIS OWN HOOK-UPS AND EXTENTIONS. THE CONTRACTOR SHALL PROVIDE BARRICADES, WARNING LANTERNS, ETC. TO PROTECT THE OWNER'S EMPLOYEES, NEIGHBORS AND VISITORS FROM ANY HAZARD OF THE CONSTRUCTION AREAS AND CONSTRUCITON ACTIVITIES.

15. CLEAN UP : AT COMPLETION OF WORK, IT SHALL BE LEFT BROOM-CLEAN AND UNDAMAGED AS A CONDITION OF ACCEPTANCE. MATERIAL AND DEBRIS NOT MOVED AND DAMAGES NOT REPAIRED WHEN DIRECTED SHALL BE ORDERED DONE BY OTHERS AND THE COST CHARGED TO THE CONTRACTOR. PAYMENTS FOR WORK COMPLETED, USE OF COMPLETED OR PARTIALLY COMPLETED WORK SHALL NOT BE CONSTRUCTED AS ACCEPTANCE OR APPROVAL OF THE WORK. ARCHITECT'S DECISIONS IN THESE MATTERS SHALL BE FINAL.

16. GUARANTEES & LIENS : PROVIDE LIEN RELEASES FROM CONTRACTORS, ALL SUB CONTRACTORS, AND SUPPLIERS. DELIVER TO THE OWNER ALL REQUIRED LIEN RELEASES, GUARANTEES AND CERTIFICATES. GUARANTEE THE ENTIRE WORK AND PROPER FUNCTIONING OF ALL EQUIPMENT APPLIANCES FOR A PERIOD OF ONE YEAR FROM THE DATE OF OWNER'S ACCEPTANCE AND THAT ANY DEFECTS SHALL BE PROMPTLY CORRECTED AT NO ADDITIONAL EXPENSE TO THE OWNER. LONGER GUARANTEES MAY BE SPECIFIED FOR CERTAIN WORK.

17. THE CONTRACTOR SHALL MAKE EVERY PROVISION TO INSURE THE INTEGRITY OF THE BUILDING. SECURITY MEASURES AND GUARD SERVICE SHALL BE PROVIDED BY THE CONTRACTOR DURING ALL TIMES WHEN THE BUILDING IS NOT SECURED.

18. PATCH, AND/OR REPAIR ALL SURFACES DAMAGED BY DEMOLITION WORK AS REQUIRED. BRACE ALL INTERIOR STUD PARTITIONS AS SHOWN ON DETAIL.

19. ALL INFORMATIONS REGARDING N.I.C. ITEMS WILL BE SUPPLIED BY THE OWNER.

20. MATERIALS TO BE USED SHALL BE OF FIRST QUALITY. THE WORK SHALL BE PERFORMED BY SKILLED MECHANICS IN A WORKMANLIKE MANNER AND CONFORM TO THE GOVERNING CODES AND REQUIREMENTS OF THE CITY.

21. ALL CEILINGS SUSPENSION SYSTEMS SHALL BE APPROVED TYPE BY THE GOVERNING AGENCIES FOR ITS PROPOSED USE. THE CONTRACTOR SHALL SUBMIT MANUFACTURER SPECIFICATION AND RESEARCH REPORT NUMBERS TO THE GOVERNING AGENCIES FOR APPROVAL PRIOR TO THE PURCHASE AND DELIVERY OF THESE MATERIALS.

ROOF AND FLOOR FRAMING NOTES

1. ROOF DIAPHRAGM TO BE 15/32" PLYWOOD, PS 1-95 "CDX", UNBLOCKED WITH 10d COMMON NAILS @6/6/12 (PANEL INDEX 32/16).

2. PROVIDE 10d @6" O.C. BOUNDARY NAILS AT THE PERIMETER OF BUILDING AND AT ALL UNIT DIVISION WALLS.

3. PROVIDE 4X WIDTH OF POST OR EQUIVALENT MULTI STUD UNDER ALL BEAMS.

4. "DBL" INDICATES 2-2X #2 SPIKED TOGETHER WITH 16d NAIL @9" O.C. STAGGERED WITH 3" MINIMUM EDGE DISTANCE AT THE ROOF AND FLOOR FRAMING.

5. SEE ARCHITECTURAL DRAWINGS FOR ALL DIMENSIONS.

6. FLOOR DIAPHRAGM TO BE 19/32" PLYWOO, PS1-83 "CDX", UNBLOCKED WITH 10d COMMON NAILS @6/6/12 (PANEL INDEX 32/16).

7. "DBL" INDICATES 2-2X #2 SPIKED TOGETHER WITH 16d NAIL @9" O.C. STAGGERED WITH 3" MINIMUM EDGE DISTANCE AT FLOOR FRAMING.

8. PROVIDE "DBL" UNDER ALL PARALLEL PARTITION WALLS.

WOOD FRAMES

1. PROVIDE DOUBLE JOISTS UNDER ALL PARALLEL TO ALL BEARING PARTITIONS, UNLESS OTHERWISE NOTED, AND ALSO NAILED TOGETHER WITH 16d COMMON NAILS @9" O.C..

2. ALL NAILING SHALL CONFORM TO THE TABLE 23-II-B-1 NAILING SCHEDULE.

3. CROSS BRIDGE FLOOR JOISTS AT 8'-0" O.C. INTERVALS, MORE THAN 8" DEEP.

4. WITH A MINIMUM OF 4" OF LAP AND 4-16d NAILS.

5. TOP PLATE OF ALL STUD WALLS SHALL BE 2 PIECES OF 2X4 PLATES. SPLICES TO LAP 4'-0" MINIMUM AND BE NAILED WITH 12-16d NAILS MINIMUM EACH SIDE OF JOIST.

6. PROVIDE SOLID 2X BLOCKINGS BETWEEN JOISTS AND RAFTERS AT ALL SUPPORTS. BLOCKING SHALL BE ONE PIECE AND THE FULL DEPTH OF THE JOIST OR RAFTER

7. USE 1X6 LET IN BRACE @25'-0" O.C. MINIMUM COVER 4 STUDS.

8. EACH SHEET OF PLYWOOD SHALL BE IDENTIFIED BY A REGISTERED STAMP OR BRAND OF THE DOGULAS FIR PLYWOOD ASSOCIATION.

9. WHERE PLYWOOD EXPOSED TO WEATHER, ALL PLYWOOD SHALL BE GLUED WITH EXTERIOR TYPE GLUE. ALL PLYWOOD SHALL CONFORM TO U.S. PRODUCT STANDARD PS 1-95

10. ALL WOOD BEARING ON CONCRETE OR MASONRY SHALL BE PRESSURE TREATED DOUGLAS FIR LARTCH.

11. STRUCTURAL MEMBERS SHALL NOT BE CUT FOR PIPES, ETC. UNLESS SPECIFICALLY DETAILED.

12. ALL SHEAR WALLS AND SHEATHING SHALL BE INSPECTED PRIOR TO COVERING.

13. ALL BOLT HOLES SHALL BE DRILLED 1/32 TO 1/16" OVERSIZED.

14. FOR SMOOTH SHANK PORTION.

15. WOOD STUDS MAY BE NOTCHED TO A DEPTH OF 25 % WIDTH OF MAXIMUM, EXCEPT INTERIOR NON-BEARING STUDS WHICH MAY BE NOTCHED TO 40 % OF WIDTH MAXIMUM.

16. STUDS MAY BE BORED TO 40 % OF WIDTH MAXIMUM EXCEPT INTERIOR NON-BEARING STUDS WHICH MAY BE BORED TO 60 % OF WIDTH MAXIMUM WHEN EACH BORED STUD IS DOUBLED WITH NOT MORE THAN TWO SUCCESSIVE DOUBLED STUDS.

17. IN NO CASE SHALL THE EDGE OF A BORED HOLE BE NEARER THAN 5/8" TO THE EDGE OF A STUD.

18. WHERE PLUMBING, HEATING OR OTHER DUCTS ARE PLACED IN A PARTITION REQUIRING THE CUTTING OF THE DOUBLE PLATE, A STEEL STRAP 1/8"X1 1/2"X24" SHALL BE FASTENED TO EACH SIDE OR THE TOP PLATES WITH 6-16d NAILS AT EACH END.

19. ALL STRUCTURAL LUMBER SHALL BE DOUGLAS FIR LARCH UNLESS NOTED OTHERWISE, AND SHALL CONFORM TO GRADING RULES OF THE WESTERN WOOD PRODUCTS ASSOCIATION, U.N.O.

A) 2 RAFTERS AND JOISTS	GRADE #2 AND BETTER
B) 4X BEAMS, POSTS AND HEADERS	GRADE #2 AND BETTER
C) 6X BEAMS, LEDGERS AND POSTS	GRADE #1 AND BETTER
D) STUDS @ BEARING WALLS/SHEAR WALLS	GRADE #1
STUDS @ NON-BEARING/NON-SHEAR WALLS	STUD GRADE
E) PLATES & BLOCKING	CONSTRUCTION GRADE
F) SILL PLATES (PRESSURE TREATED DOUGLAS FIR)	CONSTRUCTION GRADE

SHEAR WALLS AND DIAPHRAGMS

1. SOLID BLOCKING SHALL BE PROVIDED AT ALL HORIZONTAL JOINTS OCCURING IN BRACED WALL PANELS.

2. STUCCO SHEAR WALL SHALL UTILIZE FURRING, GALVANIZED NAILS (HAVING A MINIMUM 11 GA., 1-1/2" LONG, 7/16" ø HEAD, AND FURRED OUT A MIN. OF 1/4") TO ATTACH THE LATH TO THE STUDS. STAPLES SHALL NOT BE USED.

3. ALL SHEAR WALL NAILINGS SHALL UTILIZE COMMON NAILS.

4. MAINTAIN 1/8" GAP BETWEEN PLYWOOD PANELS.

5. 15/32" PLYWOOD SHALL BE 5 PLY PLYWOOD TYPICAL.

6. ALL DIAPHRAGM NAILINGS SHALL UTILIZE COMMON NAILS.

7. FRAMING AT ADJOINING PANEL EDGES SHALL BE 3-INCH NOMINAL OR THICKER AND NAILS SHALL BE STAGGERED WHERE 10d NAILS HAVING PENETRATION INTO FRAMING OF MORE THAN 1 5/8 INCHES ARE SPACED 3 INCHES OR LESS ON CENTER.

8. FRAMING AT ADJOINING PANEL EDGES SHALL BE 3-INCH NOMINAL OR THICKER AND NAILS SHALL BE STAGGERED WHERE NAILS ARE SPACED 2 INCHES OR 2-1/2 INCHES ON CENTER.

ICBO AND CITY OF LA APPROVALS

1. SIMPSON: STRONG-TIE CO-EPOXY-TIE ET-22 : LARR 25185, ICBO 4945
   FRAMING HARDWARE : LARR #25149 — STRAPS :LARR #25119
   HOLD DOWNS : LARR #24816 — HANGER :LARR #24947
   STRONG-WALL SHEAR WALL : LARR #25427, ICBO PFC-5485
2. RAMSET/REDHEAD: TRUBOLT WEDGE ANCHOR: LARR 2748, ICBO 1372
   POWDER ACTUATED FASTENERS: LARR 22668, ICBO 1639
3. HILTI:POWDER DRIVEN FASTENERS: LARR 2582, ICBO 2388
   KWIK BOLT II CONCRETE ANCHORS: LARR 24946, ICBO 4627
4. LIGHT GAGE METAL FRAMING: CEMCO--LARR 24923-T, ICBO 3403P
   WESTERN METAL:ICBO ER 4943P, LARR #512
6. ANCHOR BOLTS :LARR #22066
7. GLUED LAMINATED TIMBER: LOUISIANA-PACIFIC--LARR #24854
8. HARDY FRAME: LARR 25391, ICBO PFC-5342

FIRE NOTES

1. ADDRESS NUMBERS SHALL BE PROVIDED WHICH ARE CLEARLY VISIBLE AND LEGIBLE FROM THE STREET, AND ANY ALLEY OR OTHER STREET GIVING ACCESS TO THE PROPERTY. ADDRESS NUMBERS SHALL BE LOCATED SO AS TO BE ILLUMINATED BY SOME SOURCE, PLAINLY VISIBLE AND LEGIBLE. (1999 GBSC VOL. VI, 149)

2. a. PROVIDE A COMPLETE AUTOMATIC FIRE SPRINKLER SYSTEM THROUGHOUT THE HOUSE AND THE GARAGE INSTALLED IN ACCORDANCE WITH THE RECOMMENDATIONS OF NFPA 13D AND THE REQUIREMENTS OF THE GLENDALE FIRE DEPARTMENT. FIRE SPRINKLER PLANS SHALL BE SUBMITTED WITHIN 30 DAYS OF ISSUANCE OF THE BUILDING PERMIT. ALL SPRINKLER PIPING SHALL BE CONCEALED; NO EXPOSED PIPING ON EXTERIOR PERMITTED. RISER SHALL BE CONCEALED INSIDE THE GARAGE UNLESS OTHERWISE APPROVED ON THESE PLANS. (1999 GBSC VOL. VI, 163-164)

   b. PROVIDE AUDIBILITY THROUGHOUT THE STRUCTURE IN THE EVENT OF ACTIVATION OF THE AUTOMATIC FIRE SPRINKLER SYSTEM. CAREFUL ATTENTION TO AESTHETICS SHALL BE TAKEN INTO CONSIDERATION. IF DEVICES WILL BE INSTALLED INSIDE THE HOUSE AND VISIBLE TO OCCUPANTS, THEY SHALL BE ARCHITECTURAL GRADE MINI-HORNS OR EQUIVALENT WITH ARCHITECTURAL FINISH. OTHERWISE, STANDARD HORN OR BELL TYPE DEVICES MAY BE USED IF INSTALLED OUT OF VIEW. (EG: CLOSETS OR SIMILAR). EXTERIOR BELL OR HORN SHALL BE INSTALLED IN AN AESTHETICALLY CHOSEN LOCATION, AND SHALL BE NOMINALLY 6 INCHES.

3. MAIN EXIT DOOR SHALL BE OPENABLE FROM THE INSIDE WITHOUT ANY SPECIAL KNOWLEGE OR USE OF A KEY. THERE SHALL BE NO DOUBLE-BOLTS. (1998 CBC, 1003.3.1.8)

REVISION	DATE

NOTES

FIRESTONE KITCHEN REPAIR

1501 FIRESTONE BLVD, LOS ANGELES CA 90001

DRAWN	
CHECKED	
DATE	DEC. 2004
PROJECT NO.	

T-1.2

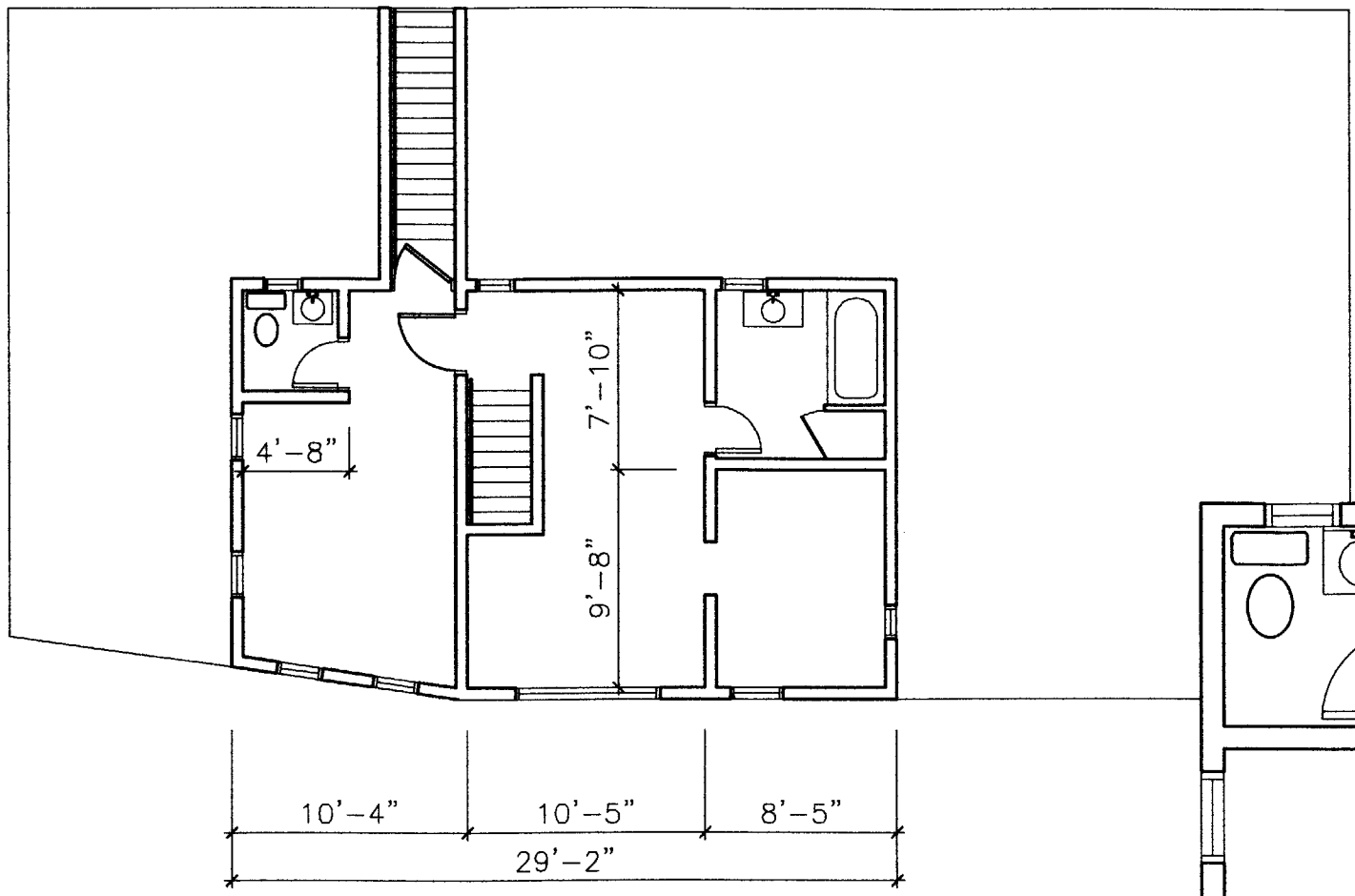

2 PLAN

1/8" = 1'-0"

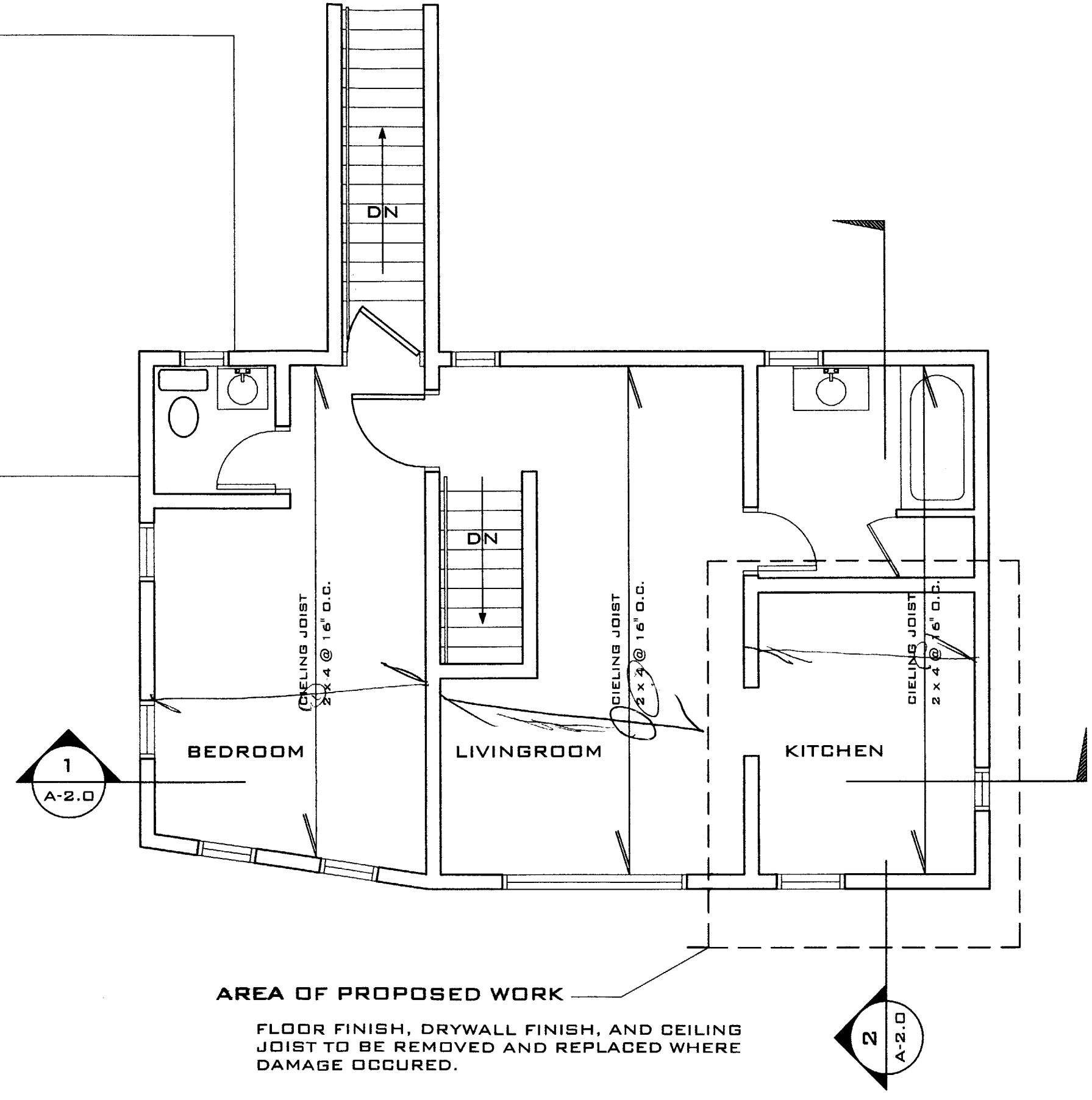

1 PLAN

1/4" = 1'-0"

REVISION	DATE

NOTES

FIRESTONE KITCHEN REPAIR

1501 FIRESTONE BLVD, LOS ANGELES CA 90001

DRAWN	
CHECKED	
DATE	DEC. 2004
PROJECT NO.	

A-1.0

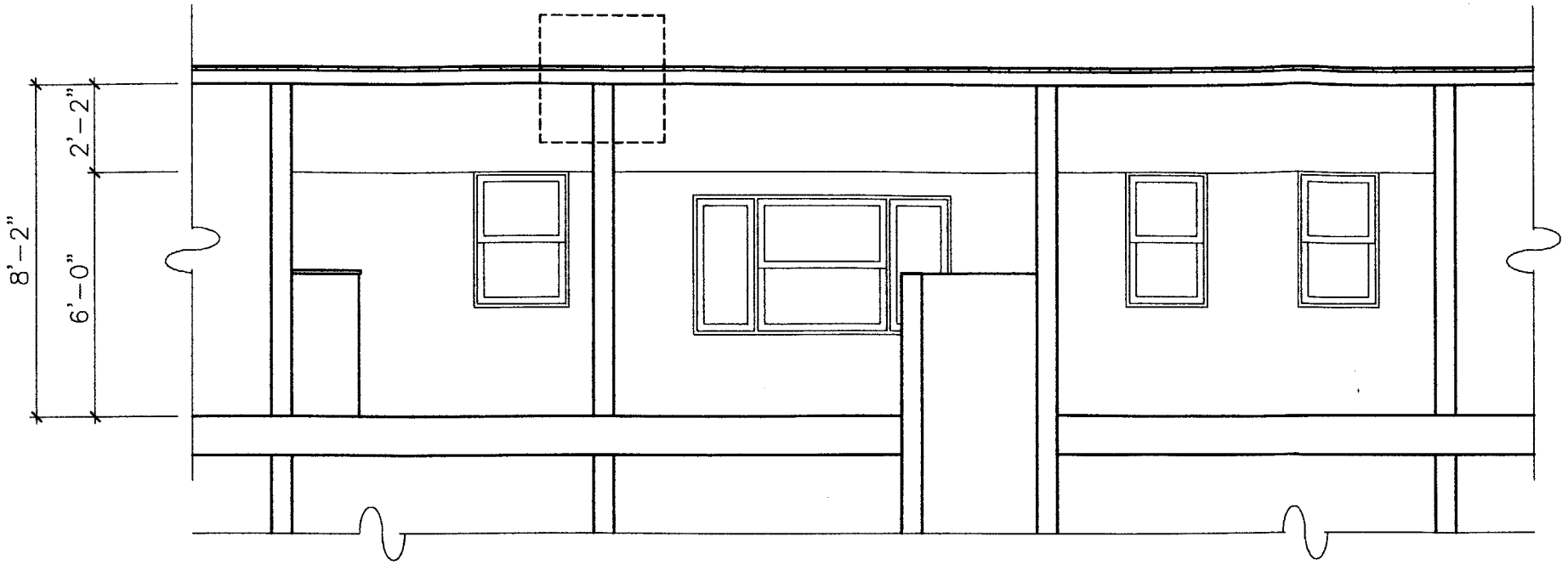

1 SECTION 1

1/4" = 1'-0" A-1.0

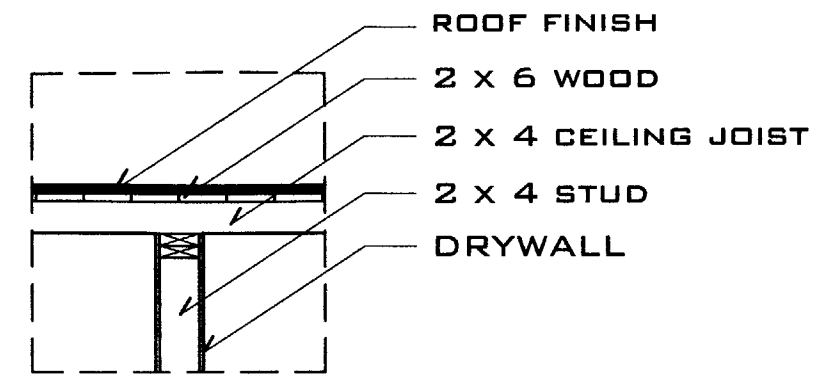

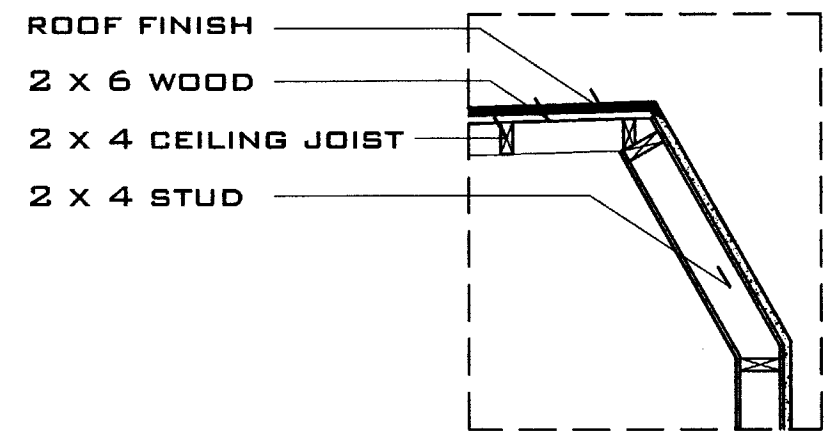

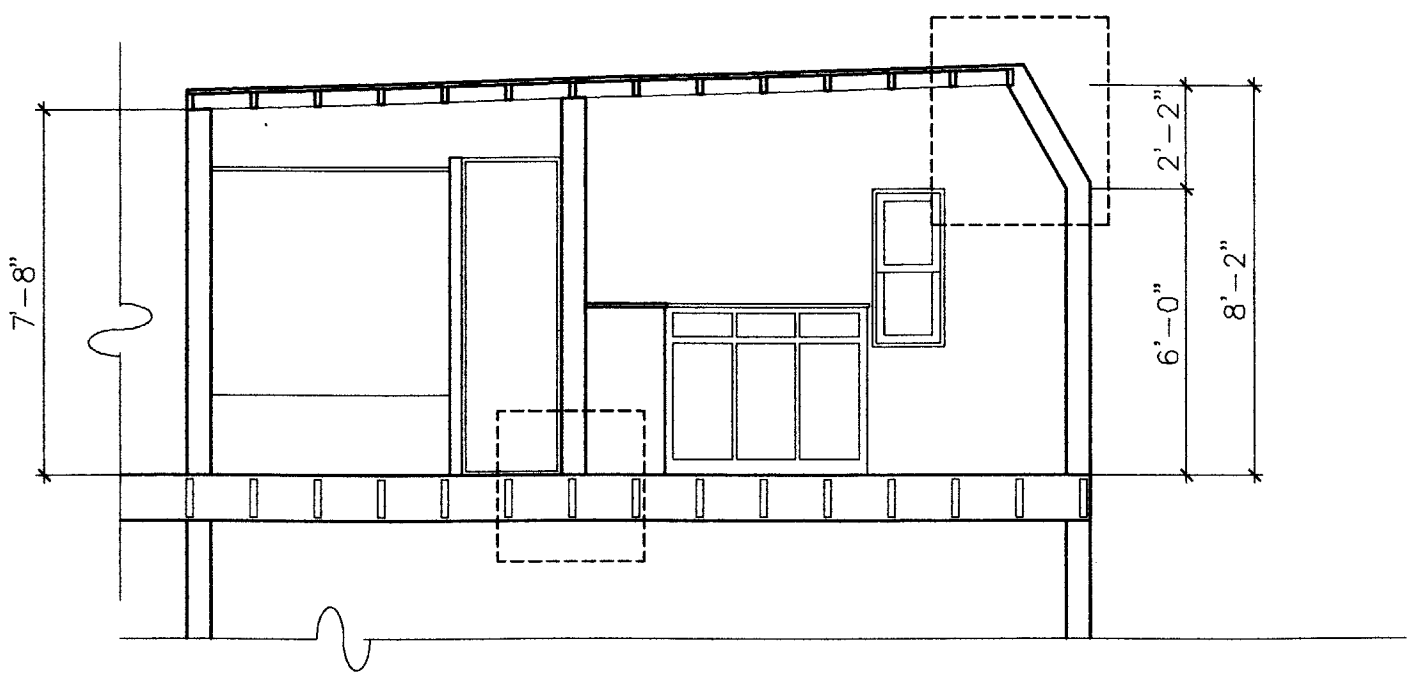

2 SECTION 1

1/4" = 1'-0" A-1.0

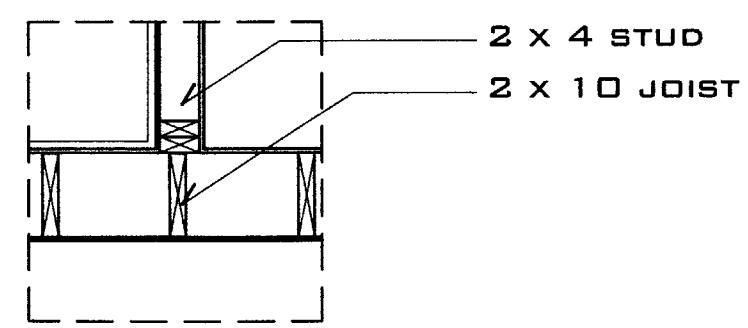

3 DETAILS 1 & 2

3/8"" = 1'-0" A-2.0

REVISION	DATE

SECTIONS + DETAILS

FIRESTONE KITCHEN REPAIR

1501 FIRESTONE BLVD, LOS ANGELES CA 90001

DRAWN	
CHECKED	
DATE	DEC. 2004
PROJECT NO.	

A-2.0