COUNTY OF LOS ANGELES
DEPARTMENT OF PUBLIC WORKS
BUILDING AND SAFETY / LAND DEVELOPMENT

WHITTIER (UNIC) # 0400
13523 TELEGRAPH ROAD
WHITTIER CA 90605
PHONE: (562) 946-1390 EXT:

BUILDING PERMIT

BL 0400 1312030055

LEGAL ID:
TR: 15435 LT: 472

ASSESSOR INFORMATION NUMBER:
7185-026-014

TENANT:

OWNER: TEL. NO:
NICK KARANZIAS (562) 425-0493-
3826 CONQUISTA AV
LBCH 908082212

APPLICANT: TEL. NO:
GARY FOSTER (714) 899-2300-
12601 MONARCH ST
GARDEN GROVE CA

CONTRACTOR: TEL. NO:
PROGRESSIVE POWER GROUP (714) 899-2300-
12601 MONARCH ST LIC. NO
GARDEN GROVE CA 92841 928459 C10

ARCHITECT OR ENGINEER: TEL. NO:
LIC. NO:

MAP NO: SEWER MAP BOOK: PAGE: FIRE ZONE: CMP:
3 00

NO. OF FAMILIES: DWELLING UNITS: APT/COND: STAT CLASS:
0 NO 20

AIR QUALITY:	SCHOOL WITHIN 1000 FEET	HAZARDOUS MATERIALS
NO	NO	NO

	SQ. FT	NO. OF STORIES	CONST TYPE	NEW OCCUP GROUP
STRUCTURE:	300	1	V-B	U
GARAGE:				
OTHER:				

EXIST BLDG USE: GARAG
EXIST OCC GRP: U

BLDGS. NOW ON LOT: VALUATION: 10,000

FEES PAID

FEE DESCRIPTION:	QUANTITY:	UOM:	AMOUNT:
AA BLDG PERMIT ISSUANCE			28.30
AB STATE GREEN BLDG FEE	10000.00	VAL	1.00
AC STRONG MOTION RESID	10000.00	VAL	1.00
P1 RES PV PC <10KW			111.90
P2 INSPCT RES PV <10KW			100.30
TOTAL FEES			242.50

REPORT ID: DPR261 ROUTE TO: BS0400

BUILDING ADDRESS:
3826 CONQUISTA AV
LBCH CA 908082212
NEAREST CROSS STREET:
THOMAS PAGE: 766 GRID: E6 LOCALITY: LONG BEACH

ISSUED ON: 12/03/13 PROCESSED BY: ES

FINAL DATE: 1/14/14 FINAL BY: MREYES CODE:

DESCRIPTION OF WORK
INSTALL ROOF MOUNTED PV SOLAR SYSTEM (20) PANELS 5.8KW.

SPECIAL CONDITIONS:

APPROVALS	DATE	INSPECTOR SIGNATURE
LOCATION AND SETBACKS		
SOILS ENGINEER APPROVAL		
FOUNDATION/TRENCH FORMS		
SLAB/UNDER FLOOR		
RAISED FLOOR FRAMING		
UNDERFLOOR INSULATION		
FLOOR SHEATHING		
ROOF SHEATHING		
SHEAR PANELS		
FRAME INSPECTION		
FIRE SPRINKLER HANGERS		
INSULATION/WEATHER STRIP		
INTERIOR LATH/DRYWALL		
EXTERIOR LATH		
RATED FLOOR/CEIL ASSEM.		
RATED WALL ASSEMBLIES		
RATED SHAFTS/OPENINGS		
T-BAR CEILINGS		
LOT DRAINAGE		

OWNER-BUILDER DECLARATION

I hereby affirm under penalty of perjury that I am exempt from the Contractors' State License Law for the reason(s) indicated below by the checkmark(s) I have placed next to the applicable item(s) (Section 7031.5, Business and Professions Code): Any city or county that requires a permit to construct, alter, improve, demolish, or repair any structure, prior to its issuance, also requires the applicant for the permit to file a signed statement that he or she is licensed pursuant to the provisions of the Contractors' State License Law (Chapter 9 (commencing with Section 7000) of Division 3 of the Business and Professions Code) or that he or she is exempt from licensure and the basis for the alleged exemption. Any violation of Section 7031.5 by any applicant for a permit subjects the applicant to a civil penalty of not more than five hundred dollars ($500).):

(_) I, as owner of the property, or my employees with wages as their sole compensation, will do (✓) all of or (_) portions of the work, and the structure is not intended or offered for sale (Section 7044, Business and Professions Code: The Contractors' State License Law does not apply to an owner of property who, through employees' or personal effort, builds or improves the property, provided that the improvements are not intended or offered for sale. If, however, the building or improvement is sold within one year of completion, the Owner-Builder will have the burden of proving that it was not built or improved for the purpose of sale.).

(_) I, as owner of the property, am exclusively contracting with licensed Contractors to construct the project (Section 7044, Business and Professions Code: The Contractors' State License Law does not apply to an owner of property who builds or improves thereon, and who contracts for the projects with a licensed Contractor pursuant to the Contractors' State License Law).

(_) I am exempt from licensure under the Contractors' State License Law for the following reason:

_____

By my signature below I acknowledge that, except for my personal residence in which I must have resided for at least one year prior to completion of the improvements covered by this permit, I cannot legally sell a structure that I have built as an owner-builder if it has not been constructed in its entirety by licensed contractors. I understand that a copy of the applicable law, Section 7044 of the Business and Professions Code, is available upon request when this application is submitted or at the following Web site: http://www.leginfo.ca.gov/calaw.html.

Date: _____

Signature of Property Owner or Authorized Agent

_____

LICENSED CONTRACTOR'S DECLARATION

I hereby affirm under penalty of perjury that I am licensed under provisions of Chapter 9 (commencing with Section 7000) of Division 3 of the Business and Professions Code, and my license is in full force and effect.

License Class C-10 License No. 978459

Date 12-3-13 Contractor Signature [signature]

WORKERS' COMPENSATION DECLARATION

WARNING: FAILURE TO SECURE WORKERS' COMPENSATION COVERAGE IS UNLAWFUL, AND SHALL SUBJECT AN EMPLOYER TO CRIMINAL PENALTIES AND CIVIL FINES UP TO ONE HUNDRED THOUSAND DOLLARS ($100,000), IN ADDITION TO THE COST OF COMPENSATION, DAMAGES AS PROVIDED FOR IN SECTION 3706 OF THE LABOR CODE, INTEREST, AND ATTORNEY'S FEES.

I hereby affirm under penalty of perjury one of the following declarations:

____I have and will maintain a certificate of consent to self-insure for workers' compensation, issued by the Director of Industrial Relations as provided for by Section 3700 of the Labor Code, for the performance of the work for which this permit is issued.

Policy No. _____

____ I have and will maintain workers' compensation insurance, as required by Section 3700 of the Labor Code, for the performance of the work for which this permit is issued. My workers' compensation insurance carrier and policy number are:

STATE FUND 0405088 4-1-14

Carrier Policy Number Expiration Date

_____ _____

Name of Agent Phone Number

___ I certify that, in the performance of the work for which this permit is issued, I shall not employ any person in any manner so as to become subject to the workers' compensation laws of California, and agree that, if I should become subject to the workers' compensation provisions of Section 3700 of the Labor Code, I shall forthwith comply with those provisions

[signature] 12-3-13

Signature of Applicant Date

LOBBYIST ORDINANCE CERTIFICATION

Complete this section for permits in Unincorporated Los Angeles County only

This is to certify that I, as permit applicant, am familiar with the requirements of Los Angeles County Code Chapter 2.160 et seq., (relating to the Los Angeles County Lobbyist Ordinance) and that all persons acting on behalf of myself complied and will continue to comply therewith through the application process.

GARY FOSTER [signature]

Applicant (Print Name) Applicant Signature

PROGRESSIVE 12-3-13

Company Name Date

JOB ADDRESS
LOCALITY

HAZARDOUS MATERIAL DECLARATION

Will the applicant or future building occupant handle a hazardous material or a mixture containing a hazardous material equal to or greater than the amount specified on the hazardous materials information guide?

Yes ☐ No ☐

Will the intended use of the building by the applicant or future building occupant require a permit for construction or modification from the South Coast Air Quality Management District (SCAQMD)? See permitting checklist for guidelines.

Yes ☐ No ☐

I have read the hazardous materials information guide and the SCAQMD permitting checklist, I understand my requirements under the Los Angeles County Code Title 2, Chapter 220 Sections 220.100 through 220.140 concerning hazardous material reporting and for obtaining a permit from the SCAQMD.

ASBESTOS NOTIFICATION

☐ Notification letter sent to AQMD and/or EPA

☐ I declare that notification of asbestos removal is not applicable to addressed project.

DECLARATION REGARDING CONSTRUCTION LENDING AGENCY

I hereby affirm under penalty of perjury that there is a Construction lending agency for the performance of the work for which this permit is issued (Section 3097, Civil Code).

Lender's Name

_____

Lender's Address

_____

By my signature below, I certify to each of the following:

I am the property owner or authorized to act on the property owner's behalf.

I have read this application and the information I have provided is correct.

I agree to comply with all applicable city and county ordinances and state laws relating to building construction.

I authorize representatives of this county to enter the above-identified property for inspection purposes.

Signature of Property Owner or Authorized Agent

[signature]

Date 12-3-13

COUNTY OF LOS ANGELES
DEPARTMENT OF PUBLIC WORKS
BUILDING AND SAFETY / LAND DEVELOPMENT

WHITTIER (UNIC) # 0400
13523 TELEGRAPH ROAD
WHITTIER CA 90605
PHONE: (562) 946-1390 EXT:

ELECTRICAL PERMIT
EL 0400 1312030034

LEGAL ID:
TR: 15435 LT: 472

ASSESSOR INFORMATION NUMBER:
7185-026-014

TENANT:

OWNER: TEL. NO:
NICK KARANZIAS (562) 425-0493-
3826 CONQUISTA AV
LBCH 908082212

APPLICANT: TEL. NO:
GARY FOSTER (714) 899-2300-
12601 MONARCH ST
GARDEN GROVE CA

CONTRACTOR: TEL. NO:
PROGRESSIVE POWER GROUP (714) 899-2300-
12601 MONARCH ST LIC. NO
GARDEN GROVE CA 92841 928459 C10

ARCHITECT OR ENGINEER: TEL. NO:
LIC. NO:

FEES PAID

FEE DESCRIPTION:	QUANTITY: UOM:	AMOUNT:
A1 PERMIT ISSUANCE FEE		28.30
P2 PC RES PV <10KW		111.90
P3 INVRTR RES PV <10KW		20.40
TOTAL FEES		160.60

REPORT ID: DPR265 ROUTE TO: BS0400

BUILDING ADDRESS:
3826 CONQUISTA AV
LBCH CA 908082212
NEAREST CROSS STREET:
THOMAS PAGE: 766 GRID: E6 LOCALITY: LONG BEACH

ISSUED ON: PROCESSED BY: PLAN BY:
12/03/13 ES

FINAL DATE FINAL BY: CODE:
1-14-14 MROYES

DESCRIPTION OF WORK
INSTALL ROOF MOUNTED PV SOLAR SYSTEM (20) PANELS 5.8KW.

SPECIAL CONDITIONS:

APPROVALS	DATE	INSPECTOR SIGNATURE
TEMPORARY POWER POLE		
UNDERGROUND CONDUIT	1-8-14	MGR
UFER GROUND		
ROUGH CONDUIT		
ROUGH WIRING		
MAIN WATER LINE PLASTIC Y/N METAL Y/N		
UTILITY COMPANY NOTIFIED		

OWNER-BUILDER DECLARATION

I hereby affirm under penalty of perjury that I am exempt from the Contractors' State License Law for the reason(s) indicated below by the checkmark(s) I have placed next to the applicable item(s) (Section 7031.5, Business and Professions Code): Any city or county that requires a permit to construct, alter, improve, demolish, or repair any structure, prior to its issuance, also requires the applicant for the permit to file a signed statement that he or she is licensed pursuant to the provisions of the Contractors' State License Law (Chapter 9 (commencing with Section 7000) of Division 3 of the Business and Professions Code) or that he or she is exempt from licensure and the basis for the alleged exemption. Any violation of Section 7031.5 by any applicant for a permit subjects the applicant to a civil penalty of not more than five hundred dollars ($500).):

(_) I, as owner of the property, or my employees with wages as their sole compensation, will do (✓) all of or (_) portions of the work, and the structure is not intended or offered for sale (Section 7044, Business and Professions Code: The Contractors' State License Law does not apply to an owner of property who, through employees' or personal effort, builds or improves the property, provided that the improvements are not intended or offered for sale. If, however, the building or improvement is sold within one year of completion, the Owner-Builder will have the burden of proving that it was not built or improved for the purpose of sale.).

(_) I, as owner of the property, am exclusively contracting with licensed Contractors to construct the project (Section 7044, Business and Professions Code: The Contractors' State License Law does not apply to an owner of property who builds or improves thereon, and who contracts for the projects with a licensed Contractor pursuant to the Contractors' State License Law).

(_) I am exempt from licensure under the Contractors' State License Law for the following reason:

_____

By my signature below I acknowledge that, except for my personal residence in which I must have resided for at least one year prior to completion of the improvements covered by this permit, I cannot legally sell a structure that I have built as an owner-builder if it has not been constructed in its entirety by licensed contractors. I understand that a copy of the applicable law, Section 7044 of the Business and Professions Code, is available upon request when this application is submitted or at the following Web site: http://www.leginfo.ca.gov/calaw.html.

Date: _____

Signature of Property Owner or Authorized Agent

_____

LICENSED CONTRACTOR'S DECLARATION

I hereby affirm under penalty of perjury that I am licensed under provisions of Chapter 9 (commencing with Section 7000) of Division 3 of the Business and Professions Code, and my license is in full force and effect.

License Class C-10 License No. 928459

Date 12-3-13 Contractor Signature [signature]

WORKERS' COMPENSATION DECLARATION

WARNING: FAILURE TO SECURE WORKERS' COMPENSATION COVERAGE IS UNLAWFUL, AND SHALL SUBJECT AN EMPLOYER TO CRIMINAL PENALTIES AND CIVIL FINES UP TO ONE HUNDRED THOUSAND DOLLARS ($100,000), IN ADDITION TO THE COST OF COMPENSATION, DAMAGES AS PROVIDED FOR IN SECTION 3706 OF THE LABOR CODE, INTEREST, AND ATTORNEY'S FEES.

I hereby affirm under penalty of perjury one of the following declarations:

____I have and will maintain a certificate of consent to self-insure for workers' compensation, issued by the Director of Industrial Relations as provided for by Section 3700 of the Labor Code, for the performance of the work for which this permit is issued.

Policy No. _____

X I have and will maintain workers' compensation insurance, as required by Section 3700 of the Labor Code, for the performance of the work for which this permit is issued. My workers' compensation insurance carrier and policy number are:

STATE FUND 0405088 4-1-13

Carrier | Policy Number | Expiration Date

_____ _____

Name of Agent | Phone Number

___ I certify that, in the performance of the work for which this permit is issued, I shall not employ any person in any manner so as to become subject to the workers' compensation laws of California, and agree that, if I should become subject to the workers' compensation provisions of Section 3700 of the Labor Code, I shall forthwith comply with those provisions

[signature] 12-3-13

Signature of Applicant | Date

LOBBYIST ORDINANCE CERTIFICATION
Complete this section for permits in Unincorporated Los Angeles County only

This is to certify that I, as permit applicant, am familiar with the requirements of Los Angeles County Code Chapter 2.160 et seq., (relating to the Los Angeles County Lobbyist Ordinance) and that all persons acting on behalf of myself complied and will continue to comply therewith through the application process.

GARY FOSTER [signature]

Applicant (Print Name) | Applicant Signature

PROGRESSIVE ROOF 12-3-13

Company Name | Date

JOB ADDRESS
LOCALITY

HAZARDOUS MATERIAL DECLARATION

Will the applicant or future building occupant handle a hazardous material or a mixture containing a hazardous material equal to or greater than the amount specified on the hazardous materials information guide?

Yes ☐ No ☐

Will the intended use of the building by the applicant or future building occupant require a permit for construction or modification from the South Coast Air Quality Management District (SCAQMD)? See permitting checklist for guidelines.

Yes ☐ No ☐

I have read the hazardous materials information guide and the SCAQMD permitting checklist, I understand my requirements under the Los Angeles County Code Title 2, Chapter 220 Sections 220.100 through 220.140 concerning hazardous material reporting and for obtaining a permit from the SCAQMD.

ASBESTOS NOTIFICATION

☐ Notification letter sent to AQMD and/or EPA

☐ I declare that notification of asbestos removal is not applicable to addressed project.

DECLARATION REGARDING CONSTRUCTION LENDING AGENCY

I hereby affirm under penalty of perjury that there is a Construction lending agency for the performance of the work for which this permit is issued (Section 3097, Civil Code).

Lender's Name

_____

Lender's Address

_____

By my signature below, I certify to each of the following:
I am the property owner or authorized to act on the property owner's behalf.
I have read this application and the information I have provided is correct.
I agree to comply with all applicable city and county ordinances and state laws relating to building construction.
I authorize representatives of this county to enter the above-identified property for inspection purposes.

Signature of Property Owner or Authorized Agent

[signature]

Date 12-3-13

COUNTY OF LOS ANGELES
DEPARTMENT OF PUBLIC WORKS
BUILDING AND SAFETY / LAND DEVELOPMENT

WHITTIER (UNIC) # 0400
13523 TELEGRAPH ROAD
WHITTIER CA 90605
PHONE: (562) 946-1390 EXT:

ELECTRICAL PERMIT
EL 0400 1401130054

LEGAL ID:
TR: 15435 LT: 472

ASSESSOR INFORMATION NUMBER:
7185-026-014

TENANT:

OWNER: TEL. NO:
NICK KARANZIAS (562) 425-0493-
3826 CONQUISTA AV
LBCH 908082212

APPLICANT: TEL. NO:
GARY FOSTER (714) 899-2300-
12601 MONARCH ST
GARDEN GROVE CA

CONTRACTOR: TEL. NO:
PROGRESSIVE POWER GROUP (714) 899-2300-
12601 MONARCH ST LIC. NO
GARDEN GROVE CA 92841 928459 C10

ARCHITECT OR ENGINEER: TEL. NO:
LIC. NO:

FEES PAID

FEE DESCRIPTION:	QUANTITY: UOM:	AMOUNT:
A1 PERMIT ISSUANCE FEE		28.30
LB 200 AMP PANELS, MCC	1.00 PAN	39.70
	TOTAL FEES	68.00

REPORT ID: DPR265 ROUTE TO: BS0400

BUILDING ADDRESS:
3826 CONQUISTA AV
LBCH CA 908082212
NEAREST CROSS STREET:
THOMAS PAGE: 766 GRID: E6 LOCALITY: LONG BEACH

ISSUED ON: PROCESSED BY: PLAN BY:
01/13/14 ES

FINAL DATE FINAL BY: CODE:
1-14-14 MREYES

DESCRIPTION OF WORK
UPGRADE PANEL TO 200 AMPS

SPECIAL CONDITIONS:

APPROVALS	DATE	INSPECTOR SIGNATURE
TEMPORARY POWER POLE		
UNDERGROUND CONDUIT		
UFER GROUND		
ROUGH CONDUIT		
ROUGH WIRING		
MAIN WATER LINE PLASTIC Y/N METAL Y/N		
UTILITY COMPANY NOTIFIED		

OWNER-BUILDER DECLARATION

I hereby affirm under penalty of perjury that I am exempt from the Contractors' State License Law for the reason(s) indicated below by the checkmark(s) I have placed next to the applicable item(s) (Section 7031.5, Business and Professions Code): Any city or county that requires a permit to construct, alter, improve, demolish, or repair any structure, prior to its issuance, also requires the applicant for the permit to file a signed statement that he or she is licensed pursuant to the provisions of the Contractors' State License Law (Chapter 9 (commencing with Section 7000) of Division 3 of the Business and Professions Code) or that he or she is exempt from licensure and the basis for the alleged exemption. Any violation of Section 7031.5 by any applicant for a permit subjects the applicant to a civil penalty of not more than five hundred dollars ($500).):

(_) I, as owner of the property, or my employees with wages as their sole compensation, will do (✓) all of or (_) portions of the work, and the structure is not intended or offered for sale (Section 7044, Business and Professions Code: The Contractors' State License Law does not apply to an owner of property who, through employees' or personal effort, builds or improves the property, provided that the improvements are not intended or offered for sale. If, however, the building or improvement is sold within one year of completion, the Owner-Builder will have the burden of proving that it was not built or improved for the purpose of sale.).

(_) I, as owner of the property, am exclusively contracting with licensed Contractors to construct the project (Section 7044, Business and Professions Code: The Contractors' State License Law does not apply to an owner of property who builds or improves thereon, and who contracts for the projects with a licensed Contractor pursuant to the Contractors' State License Law).

(_) I am exempt from licensure under the Contractors' State License Law for the following reason:

_____

By my signature below I acknowledge that, except for my personal residence in which I must have resided for at least one year prior to completion of the improvements covered by this permit, I cannot legally sell a structure that I have built as an owner-builder if it has not been constructed in its entirety by licensed contractors. I understand that a copy of the applicable law, Section 7044 of the Business and Professions Code, is available upon request when this application is submitted or at the following Web site: http://www.leginfo.ca.gov/calaw.html.

Date: _____

Signature of Property Owner or Authorized Agent

_____

LICENSED CONTRACTOR'S DECLARATION

I hereby affirm under penalty of perjury that I am licensed under provisions of Chapter 9 (commencing with Section 7000) of Division 3 of the Business and Professions Code, and my license is in full force and effect.

License Class C-10 License No. 928457

Date 1-13-14 Contractor Signature _____

WORKERS' COMPENSATION DECLARATION

WARNING: FAILURE TO SECURE WORKERS' COMPENSATION COVERAGE IS UNLAWFUL, AND SHALL SUBJECT AN EMPLOYER TO CRIMINAL PENALTIES AND CIVIL FINES UP TO ONE HUNDRED THOUSAND DOLLARS ($100,000), IN ADDITION TO THE COST OF COMPENSATION, DAMAGES AS PROVIDED FOR IN SECTION 3706 OF THE LABOR CODE, INTEREST, AND ATTORNEY'S FEES.

I hereby affirm under penalty of perjury one of the following declarations:

____I have and will maintain a certificate of consent to self-insure for workers' compensation, issued by the Director of Industrial Relations as provided for by Section 3700 of the Labor Code, for the performance of the work for which this permit is issued.

Policy No. _____

____ I have and will maintain workers' compensation insurance, as required by Section 3700 of the Labor Code, for the performance of the work for which this permit is issued. My workers' compensation insurance carrier and policy number are:

STATE FUND 0405088 4-1-14

Carrier Policy Number Expiration Date

_____ _____

Name of Agent Phone Number

___ I certify that, in the performance of the work for which this permit is issued, I shall not employ any person in any manner so as to become subject to the workers' compensation laws of California, and agree that, if I should become subject to the workers' compensation provisions of Section 3700 of the Labor Code, I shall forthwith comply with those provisions

_____ _____

Signature of Applicant Date

LOBBYIST ORDINANCE CERTIFICATION

Complete this section for permits in Unincorporated Los Angeles County only

This is to certify that I, as permit applicant, am familiar with the requirements of Los Angeles County Code Chapter 2.160 et seq. (relating to the Los Angeles County Lobbyist Ordinance) and that all persons acting on behalf of myself complied and will continue to comply therewith through the application process.

GARY FOSTER _____

Applicant (Print Name) Applicant Signature

PROFESSIONAL POWER 1-13-14

Company Name Date

JOB ADDRESS
LOCALITY

HAZARDOUS MATERIAL DECLARATION

Will the applicant or future building occupant handle a hazardous material or a mixture containing a hazardous material equal to or greater than the amount specified on the hazardous materials information guide?

Yes ☐ No ☐

Will the intended use of the building by the applicant or future building occupant require a permit for construction or modification from the South Coast Air Quality Management District (SCAQMD)? See permitting checklist for guidelines.

Yes ☐ No ☐

I have read the hazardous materials information guide and the SCAQMD permitting checklist, I understand my requirements under the Los Angeles County Code Title 2, Chapter 220 Sections 220.100 through 220.140 concerning hazardous material reporting and for obtaining a permit from the SCAQMD.

ASBESTOS NOTIFICATION

☐ Notification letter sent to AQMD and/or EPA

☐ I declare that notification of asbestos removal is not applicable to addressed project.

DECLARATION REGARDING CONSTRUCTION LENDING AGENCY

I hereby affirm under penalty of perjury that there is a Construction lending agency for the performance of the work for which this permit is issued (Section 3097, Civil Code).

Lender's Name

_____

Lender's Address

_____

By my signature below, I certify to each of the following:

I am the property owner or authorized to act on the property owner's behalf.

I have read this application and the information I have provided is correct.

I agree to comply with all applicable city and county ordinances and state laws relating to building construction.

I authorize representatives of this county to enter the above-identified property for inspection purposes.

Signature of Property Owner or ~~Authorized Agent~~

_____

Date 1-13-14

1 SITE PLAN

SCALE : 1/16" = 1'-0"

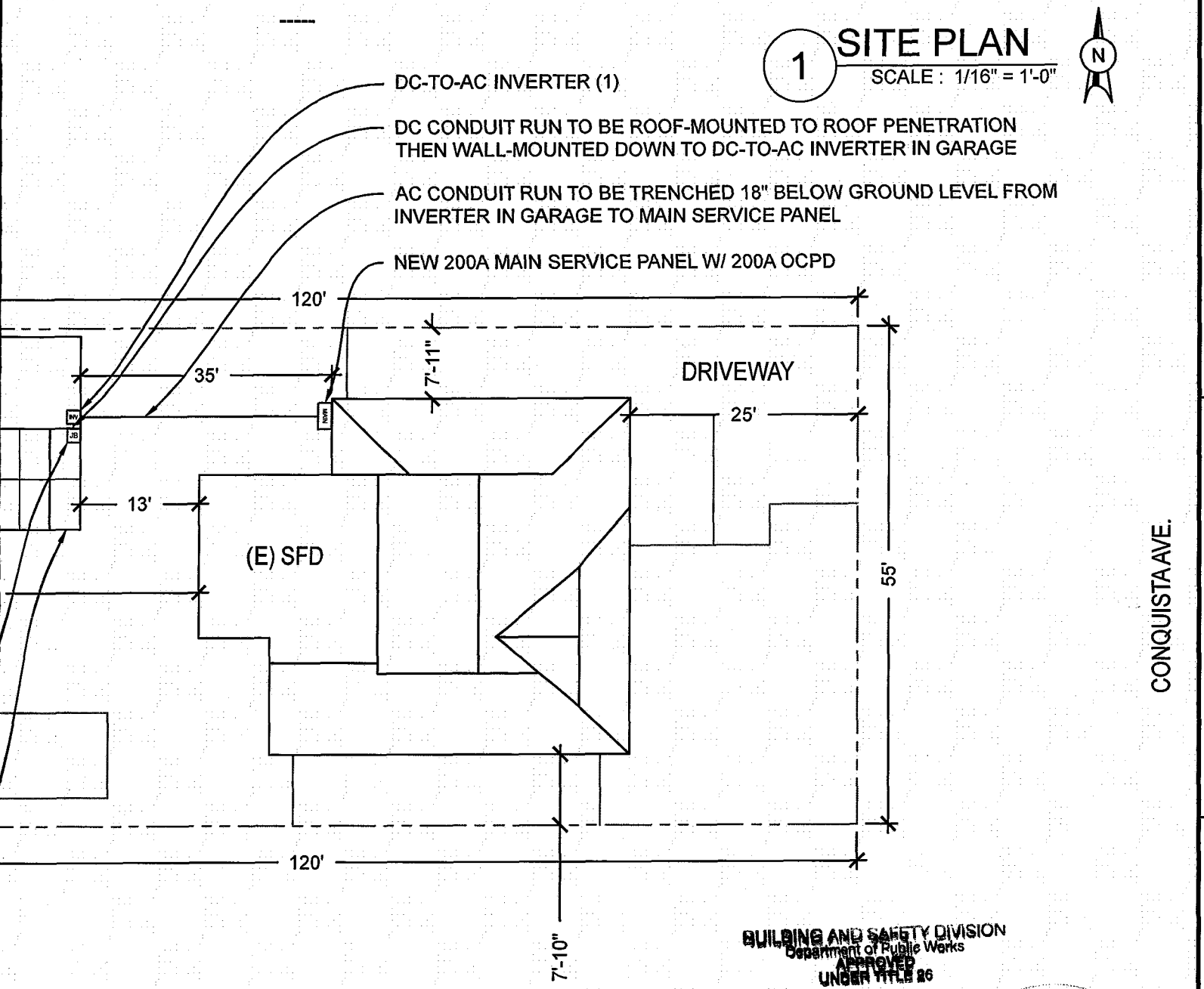

BUILDING AND SAFETY DIVISION
Department of Public Works
APPROVED
UNDER TITLE 26
BY:
DEC 03 2013

This set of plans and specifications must be kept on the job at all times and it is unlawful to make any Changes or alterations on same without written permission from the Building and Safety Division, County of Los Angeles. The stamping of this plan and specification SHALL NOT be held to permit or to be an approval of a violation of any provisions of any County Ordinance or State Law.

PROGRESSIVE POWER GROUP

PROGRESSIVE POWER GROUP, INC.
12601 MONARCH ST.
GARDEN GROVE,
CA 92841

PV1.0

V4.0C

SYSTEM SUMMARY

THIS GRID TIED 5.8 kW DC, 5.66 kW AC CEC ROOF MOUNTED SOLAR ELECTRIC SYSTEM WITHOUT ENERGY STORAGE COMPONENTS CONSISTS OF:
(20) LG ELECTRONICS LG290N1C
W/ SOLAR EDGE OPTIMIZERS &
(1) SOLAR EDGE SE5000A-US INVERTER

THE INSTALLATION OF SOLAR ARRAYS AND PHOTOVOLTAIC POWER SYSTEMS SHALL COMPLY WITH: 2010 CEC, CBC, CRC & CFC; COUNTY OF LOS ANGELES MUNICIPAL ORDINANCES & FIRE CODE

JURISDICTIONAL INFORMATION:

JURISDICTION: CO. OF LA (LOMITA)

ADDRESS: 24320 SOUTH NARBONNE AVE.
LOMITA, CA 90717

PHONE NUMBER: (310) 534-3760

SHEET NUMBER	SHEET TITLE
PV1.0	COVER AND SITE PLAN
PV1.1	ELEVATION
PV2.0	NOTES
PV3.0	ELECTRICAL DETAIL
PV3.1	CALCULATIONS
PV3.2	LABELS
PV4.0	LAYOUT AND STRUCTURAL
PV4.1	STRUCTURAL DETAIL

NOTE: BALANCE OF SYSTEM (BOS) EQUIPMENT SHOWN FOR REFERENCE TO LOCATION ONLY - NOT TO SCALE

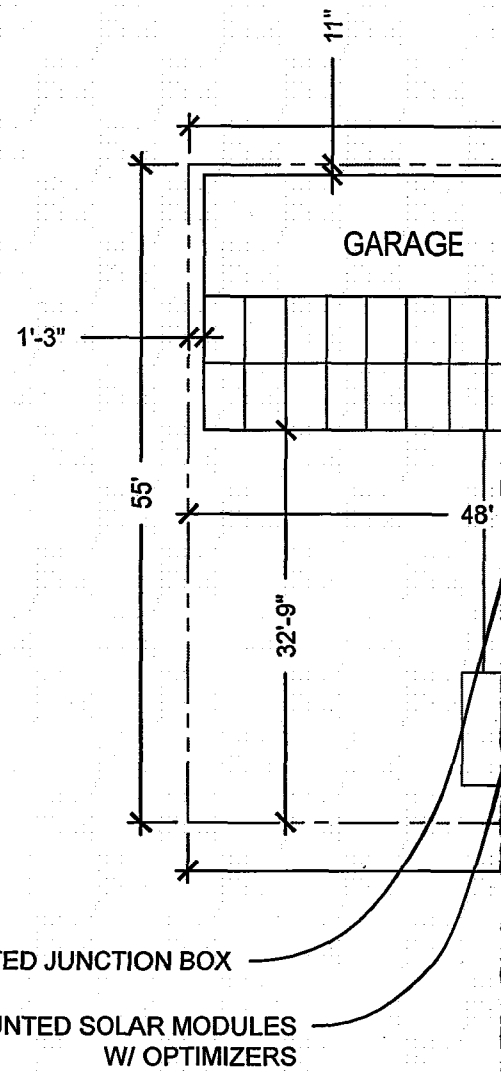

KEY:

- PROPERTY LINE
- CONDUIT RUN
- DRIVEWAY
- SOLAR MODULE
- MAIN — MAIN SERVICE
- M — METER
- INV — INVERTER
- SUB — SUBPANEL
- DC — DC DISCONNECT
- AC — AC DISCONNECT
- JB — JUNCTION BOX
- M — MONITORING UNIT
- CB — COMBINER BOX
- ROOF OBSTRUCTION

ALL WORK TO COMPLY WITH 2010 CALIFORNIA BUILDING CODE; 2010 ELECTRICAL CODE [NEC 2008] - ARTICLE 690, ALL MANUFACTURER'S LISTING AND INSTALLATION INSTRUCTIONS

PROGRESSIVE POWER GROUP, INC.
12601 MONARCH STREET
GARDEN GROVE, CA 92841
LICENSE #: 928459

THESE DRAWINGS, SPECIFICATIONS, AND DESIGNS ARE THE PROPERTY OF PROGRESSIVE POWER GROUP INC. NO PART SHALL BE COPIED OR USED FOR OR WITH ANY OTHER WORK OTHER THAN THE SPECIFIC PROJECT FOR WHICH THEY HAVE BEEN DEVELOPED WITHOUT OUR WRITTEN CONSENT

COVER AND SITE PLAN

KARANZIAS, NICK

3826 CONQUISTA AVE.

LONG BEACH, CA 90808

PHONE: (562) 425-0493

APN: 7185025024

Sheet Size: 11x17