1

76A638A CE#803 8-64

APPLICATION FOR BUILDING PERMIT

COUNTY OF LOS ANGELES
DEPARTMENT OF COUNTY ENGINEER
BUILDING AND SAFETY DIVISION
JOHN A. LAMBIE, COUNTY ENGINEER
COLEMAN W. JENKINS, SUP'T OF BUILDING

BUILDING ADDRESS 20908 New Hampshire
LOCALITY Carson
NEAREST CROSS ST.

DISTRICT NO.	GROUP	TYPE CONST.	PROCESSED BY
12	I	V.	[illegible]

STATISTICAL CLASSIFICATION
CLASS NO. 23 DWELL UNITS ____
SEWER MAP ~~BK~~ PG

USE ZONE A1
MAP NO. 4209
SPECIAL CONDITIONS

BLDG. SETBACK FROM FRONT PROP. LINE OF 20' New Hamp (STREET)

TYPE OF HIGHWAY	EXISTING WIDTH	SETBACK FROM C.L.	HIGHWAY + YARD = TOTAL
			+ =

BLDG. SETBACK FROM SIDE PROP. LINE OF ____ (STREET)

TYPE OF HIGHWAY	EXISTING WIDTH	SETBACK FROM C.L.	HIGHWAY + YARD = TOTAL
			+ =

CORNER CUTOFF YES ☐ NO ☐

FOR APPLICANT TO FILL IN

BUILDING ADDRESS 20908 So. New Hampshire
LOT NO. 27 BLOCK
TRACT 25289
SIZE OF LOT 50' X 114' NO. OF BLDGS. NOW ON LOT 1
USE OF EXISTING BLDG.
OWNER Kim, Young S. TEL. NO. FA 81152
ADDRESS 20908 So. New Hampshire
CITY Torrance
ARCHITECT OR ENGINEER TEL. NO.
ADDRESS
CONTRACTOR TEL. NO
ADDRESS LIC. NO.
CITY LIC CLASS

DESCRIPTION OF WORK

NEW ADD ✓ ALTER REPAIR DEMOLISH
SQ. FT. SIZE 50' X 114' NO. OF STORIES 1 NO. OF FAMILIES 1
USE OF STRUCTURE Bedroom

SIGNATURE OF APPLICANT Young S. Kim
VALUATION $ 1,400.00

P.C. FEE $ PMT. FEE $ 11.50

I HEREBY ACKNOWLEDGE THAT I HAVE READ THIS APPLICATION AND STATE THAT THE ABOVE IS CORRECT AND AGREE TO COMPLY WITH ALL COUNTY ORDINANCES AND STATE LAWS REGULATING BUILDING CONSTRUCTION. I CERTIFY THAT IN DOING THE WORK AUTHORIZED HEREBY I WILL NOT EMPLOY ANY PERSON IN VIOLATION OF THE LABOR CODE OF THE STATE OF CALIFORNIA RELATING TO WORKMEN'S COMPENSATION INSURANCE.

SIGNATURE OF PERMITTEE Young S. Kim
ADDRESS 20908 So. New Hampshire

SEE REVERSE SIDE FOR SPECIAL APPROVALS

8-30-65 Framing on addition
OK Final Framing
when Light + ventilation
provided for existing bedroom
Gillett

APPROVALS	DATE	INSPECTOR'S SIGNATURE
FOUNDATION, LOCATION FORMS, MATERIALS	8-20-65	Gillett
FRAME, FIRE STOPS, BRACING BOLTS	9-1-65	G. Woods
FURNACE: LOCATION GAS VENT. DUCTS		
~~LATH~~ INT. PANEL	9-7-65	G. Woods
LATH. EXT.	9-1-65	G. Woods
HOUSE NUMBER CORRECT AND POSTED		
FINAL	9-13-65	G. Woods

INSPECTOR COPY

JOHN F. LEWIS, PRINCIPAL STRUCTURAL ENGINEER

PLAN CHECK VALIDATION CK. M.O. CASH

PERMIT VALIDATION CK. M.O. CASH

1 AC 76776 AUG 18 1 A 11.50 $

[signature]

	NOT REQUIRED	RECEIVED OR REQUIRED
WATER CERTIFICATE		
ROAD. DEPT. APPROVAL		
HEALTH DEPT. APPROVAL		
FIRE DEPT. APPROVAL		
GRADING APPROVAL		
GEOLOGICAL APPROVAL		
PEDESTRIAN PROTECTION (FENCE) (CANOPY)		
SPECIAL INSPECTION ON (CONC.) (MASRY.) (WELDG.)		

76A663-CE806 4-65

APPLICATION FOR ELECTRICAL PERMIT

1

COUNTY OF LOS ANGELES
DEPARTMENT OF COUNTY ENGINEER
BUILDING AND SAFETY DIVISION
JOHN A. LAMBIE, COUNTY ENGINEER
COLEMAN W. JENKINS, SUP'T. OF BUILDING

BUILDING ADDRESS	20908 New Hampshire
LOCALITY	Torrance
NEAREST CROSS ST.	Torrance Blvd
OWNER	Young Kim
MAIL ADDRESS	20908 New Hampshire
CITY	Torrance TEL. NO.
CONTRACTOR	AAA1-Electric Co
ADDRESS	1318 Amapola Ave
CITY	Torrance TEL. NO. FA8862 9
STATE LICENSE NO.	213975

FOR APPLICANT TO FILL IN

			NO.	EACH	FEE	
RECEPTACLE 8	TOTAL OUTLETS	FIRST 20	9	$ .20	$ 1	80
LIGHT 2						
SWITCH 2	9	ADD'L OVER 20		.10		
LIGHTING FIXTURES	TOTAL FIXTURES	FIRST 20	2	.20		40
	2	ADD'L OVER 20		.10		
RANGES	CLO. DRYERS	WTR. HTRS.		1.00		
GARB. DISP.	STA. COOK					
DISHWASH.	AUTO.-WASH.					
SPACE HTRS.	STA. APP. (½ H.P. MAX.)			.50		
MOTORS: OVER	NOT OVER	H.P.				
0	1			1.00		
1	3			1.50		
3	8			2.00		
8	15			2.50		
15	50			3.00		
50	100			5.00		
SIGNS:	NO. TRANS. / NO. LAMPS					
SERVICE 0-600V-NOT OVER 200A				1.00		
SERVICE 0-600V-OVER 200 A.				2.00		
SERVICE OVER 600V				5.00		
OTHER (SEE COMPLETE FEE SCHEDULE)						
PERMIT ISSUING FEE				2.00	2	00
SUPPLEMENTARY PERMIT ISSUING FEE				1.00		
TOTAL FEE					$ 4.	20

I HEREBY ACKNOWLEDGE THAT I HAVE READ THIS APPLICATION AND STATE THAT THE ABOVE IS CORRECT AND AGREE TO COMPLY WITH ALL COUNTY ORDINANCES AND STATE LAWS REGULATING ELECTRICAL WIRING.

I HEREBY CERTIFY THAT I AM PROPERLY REGISTERED AND/OR LICENSED AS REQUIRED BY LOS ANGELES COUNTY AND STATE OF CALIFORNIA OR THAT I AM THE LEGAL OWNER OF, AND INTEND TO RESIDE IN, THE ABOVE DESCRIBED RESIDENTIAL PROPERTY.

SIGNATURE OF PERMITTEE Daniel Wells

DISTRICT NO.	GROUP	ZONE	PROCESSED BY
12	I	A1	Ewm

INSPECTION RECORD

APPROVALS	DATE	INSPECTOR'S SIGNATURE
UNDERSLAB WORK	—	
ROUGH CONDUIT		
WIRING	8-30-65	G. Woods
FIXTURES	9-13-65	G. Woods
POWER		
UTILITY CO. NOTIFIED		
FINAL	9-13-65	G. Woods

INSPECTOR COPY

VALIDATION
CK MO CASH

JOSEPH C. ROOHAN
SUPERVISING ELECTRICAL ENGINEER

LAC 80143 AUG 27 2 A 4.20 $

76A667 - CE#817 12-64

APPLICATION FOR PLUMBING PERMIT

1

COUNTY OF LOS ANGELES
DEPARTMENT OF COUNTY ENGINEER
BUILDING AND SAFETY DIVISION
JOHN A. LAMBIE, COUNTY ENGINEER
COLEMAN W. JENKINS, SUP'T OF BUILDING

BUILDING ADDRESS	20908 So. New Hampshire
LOCALITY	Torrance
NEAREST CROSS ST.	Torrance Blvd.
OWNER	Kim
MAIL ADDRESS	20908 So. New Hampshire
CITY	Torrance TEL. NO. FA 81152
CONTRACTOR	owner
ADDRESS	
CITY	TEL. NO.
CONTRACTOR'S REGISTRATION NO.	STATE ☐ COUNTY ☐

FOR APPLICANT TO FILL IN

NUMBER	FIXTURE OR ITEM	EACH	FEE	
	WATER CLOSET	$1.25		
	BATH TUB	1.25		
	SHOWER	1.25		
	LAVATORY	1.25		
	SINK	1.25		
	DISHWASHER	1.25		
	LAUNDRY TUB	1.25		
	CLOTHES WASHER	1.25		
	WATER HEATER	1.50		
	GAS SYSTEM _____ OUTLETS	1.50		
	OUTLETS OVER 5 PER SYSTEM	.30		
1	WATER LINE		1	50
	PERMIT	$	2	00
	TOTAL FEE		3	50

I HEREBY ACKNOWLEDGE THAT I HAVE READ THIS APPLICATION AND STATE THAT THE ABOVE IS CORRECT AND AGREE TO COMPLY WITH ALL COUNTY ORDINANCES AND STATE LAWS REGULATING PLUMBING.

I HEREBY CERTIFY THAT I AM PROPERLY REGISTERED AND/OR LICENSED AS REQUIRED BY LOS ANGELES COUNTY AND STATE OF CALIFORNIA OR THAT I AM THE LEGAL OWNER OF, AND INTEND TO RESIDE IN, THE ABOVE DESCRIBED RESIDENTIAL PROPERTY.

SIGNATURE OF PERMITTEE Y. S. Kim

DISTRICT NO.	GROUP	ZONE	PROCESSED BY
12	I	A1	Erwin

INDUSTRIAL WASTE APPROVAL

INSPECTION RECORD

APPROVALS	DATE	INSPECTOR'S SIGNATURE
UNDER SLAB WORK		
ROUGH PLUMBING		
GAS PIPING		
GAS VENT		
HOT WATER HEATER		
PLUMBING FIXTURES		
GAS TEST		
UTILITY CO. NOTIFIED		
FINAL	9-1-65	G. Woods

INSPECTOR COPY

VALIDATION
CK. M. O. CASH

ROBERT A. WOOD
SUPERVISING MECHANICAL ENG'R

1 AC 77785 AUG 20 5 A 3.50 57

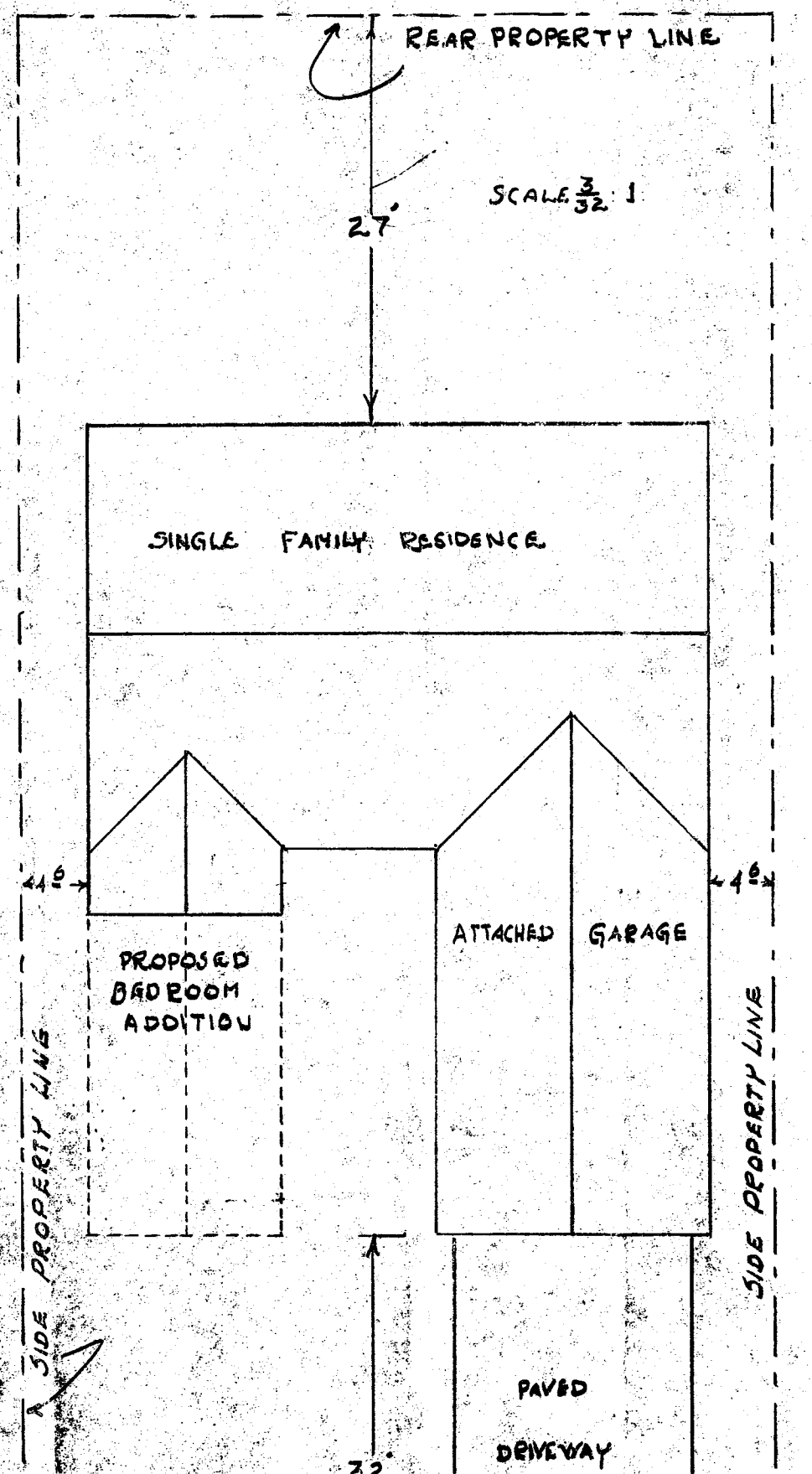
REAR PROPERTY LINE
SCALE 3/32 : 1
27'
SINGLE FAMILY RESIDENCE
4'6"
4'6"
PROPOSED BEDROOM ADDITION
ATTACHED GARAGE
SIDE PROPERTY LINE
SIDE PROPERTY LINE
PAVED DRIVEWAY
32'

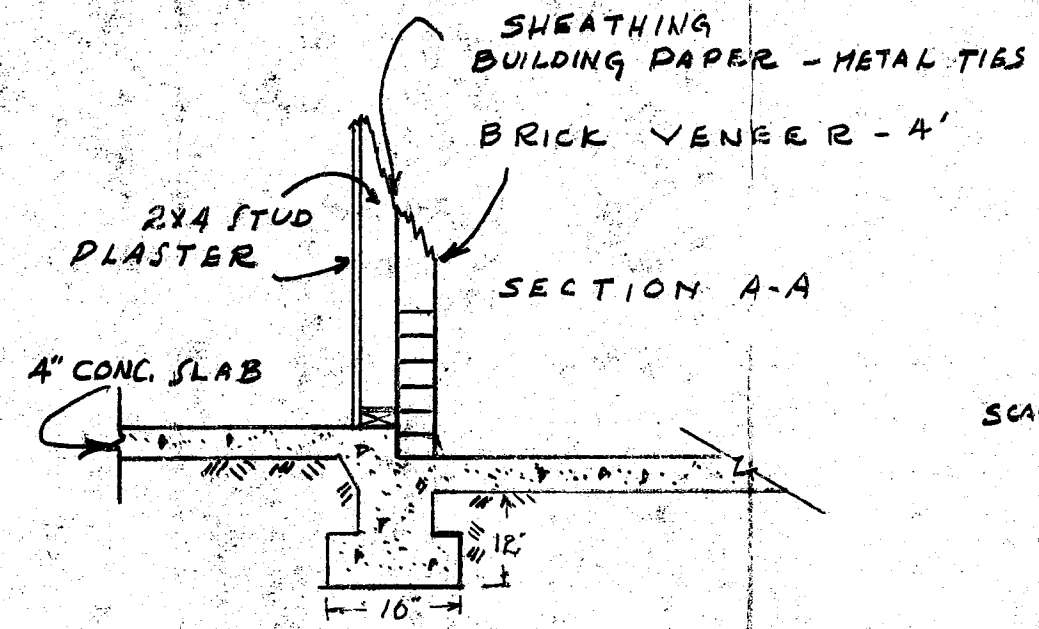
SHEATHING
BUILDING PAPER - METAL TIES
BRICK VENEER - 4'
2X4 STUD
PLASTER
SECTION A-A
4" CONC. SLAB
12"
16"

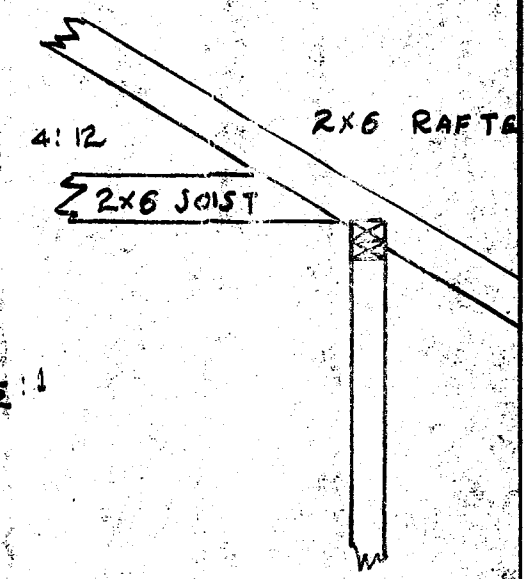
4:12
2X6 RAFTE
2X6 JOIST

SCALE 1/2 : 1

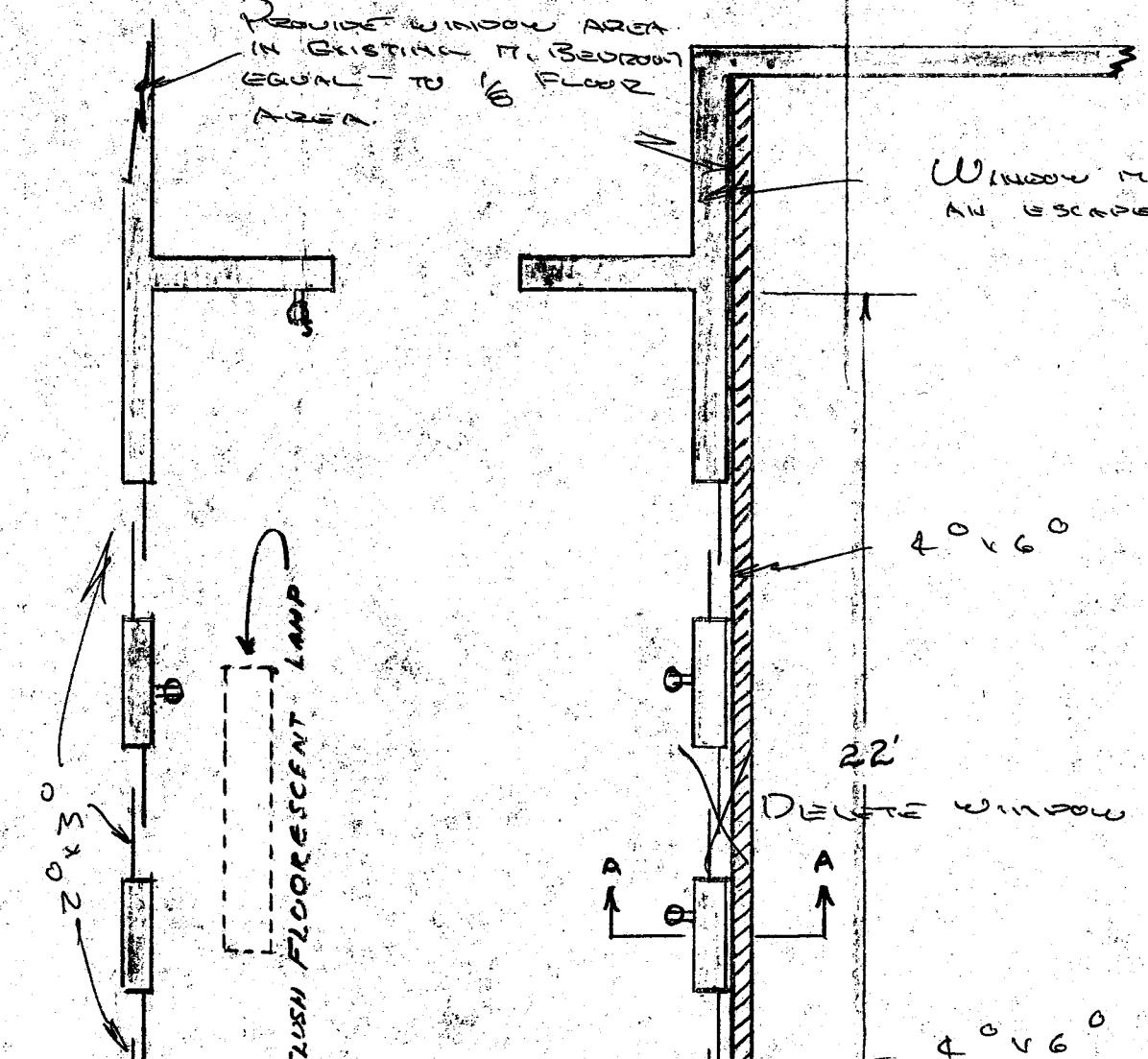
REQUIRE WINDOW AREA IN EXISTING M. BEDROOM EQUAL TO 1/8 FLOOR AREA
WINDOW MUST COMPLY WITH AN ESCAPE TYPE WINDOW
4'0"x6'0"
22'
DELETE WINDOW
A
A
4'0"x6'0"
3'0"x2'0"
FLUSH FLOORESCENT LAMP

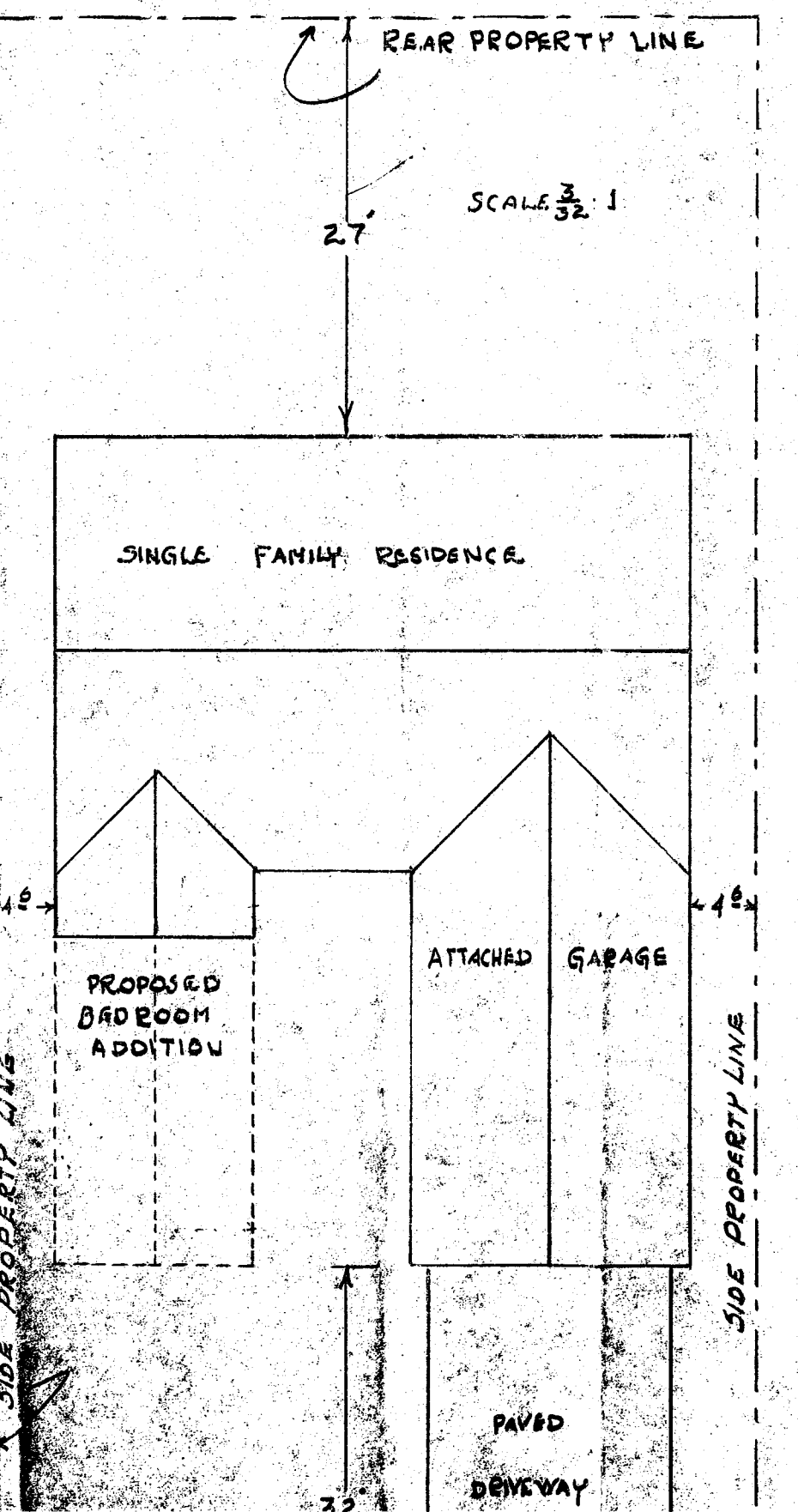
REAR PROPERTY LINE
SCALE 3/32 : 1
27'
SINGLE FAMILY RESIDENCE
4'
4'
PROPOSED BEDROOM ADDITION
ATTACHED GARAGE
SIDE PROPERTY LINE
SIDE PROPERTY LINE
PAVED DRIVEWAY
32'

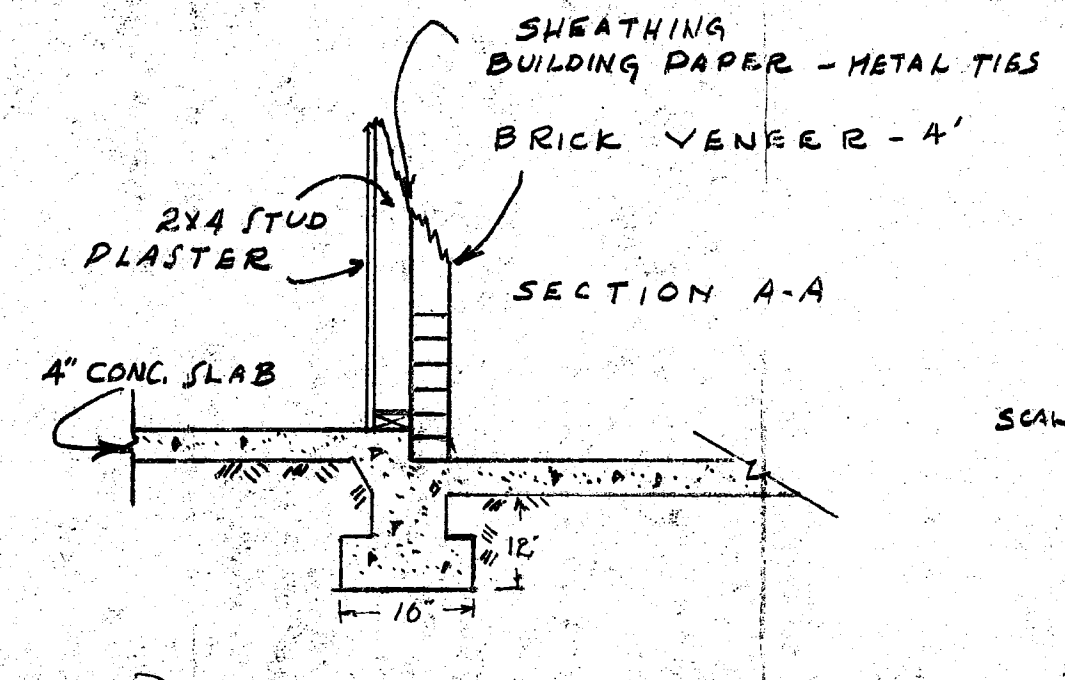
SHEATHING
BUILDING PAPER - METAL TIES
BRICK VENEER - 4'
2X4 STUD
PLASTER
SECTION A-A
4" CONC. SLAB
12"
16"

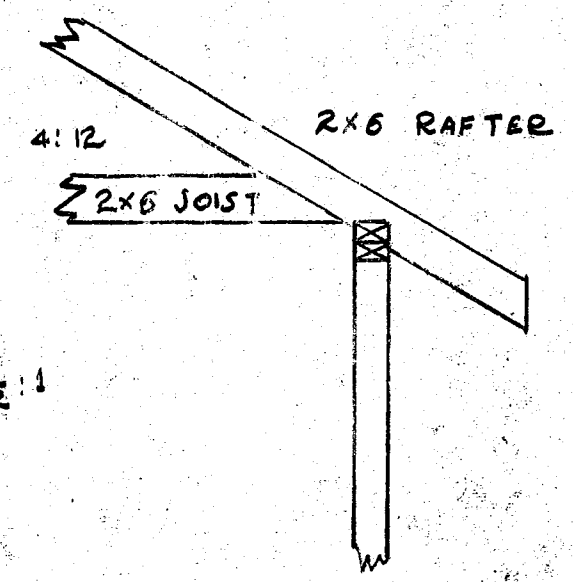
4:12
2X6 RAFTER
2X6 JOIST
SCALE 1/2 : 1

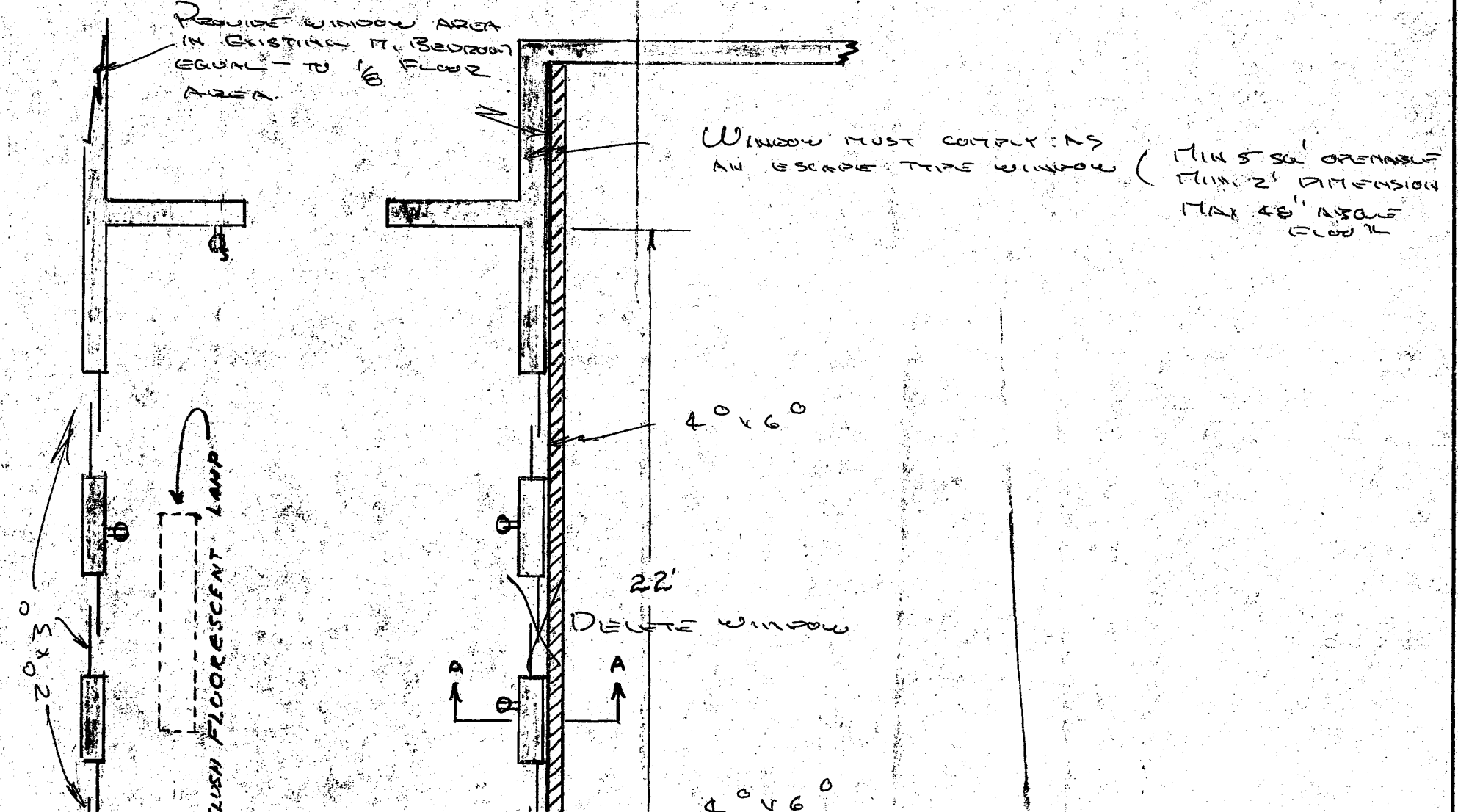
REQUIRE WINDOW AREA IN EXISTING M. BEDROOM EQUAL TO 1/6 FLOOR AREA.
WINDOW MUST COMPLY WITH AN ESCAPE TYPE WINDOW (MIN 5 SQ' OPENABLE MIN. 2' DIMENSION MAX 48" ABOVE FLOOR
4'0" x 6'0"
22'
DELETE WINDOW
A
A
4'0" x 6'0"
2'0" x 3'0"
FLUSH FLOORESCENT LAMP

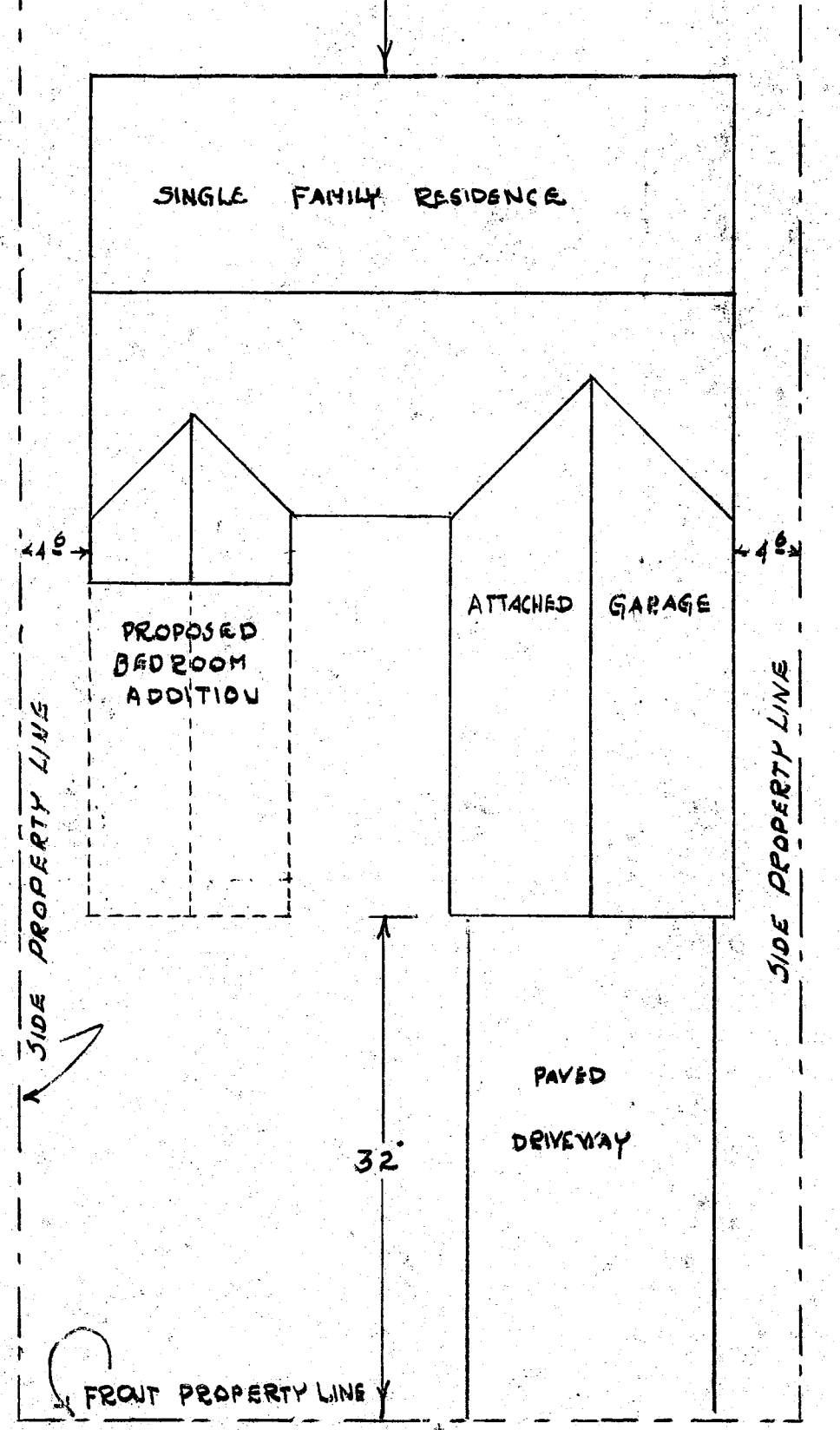

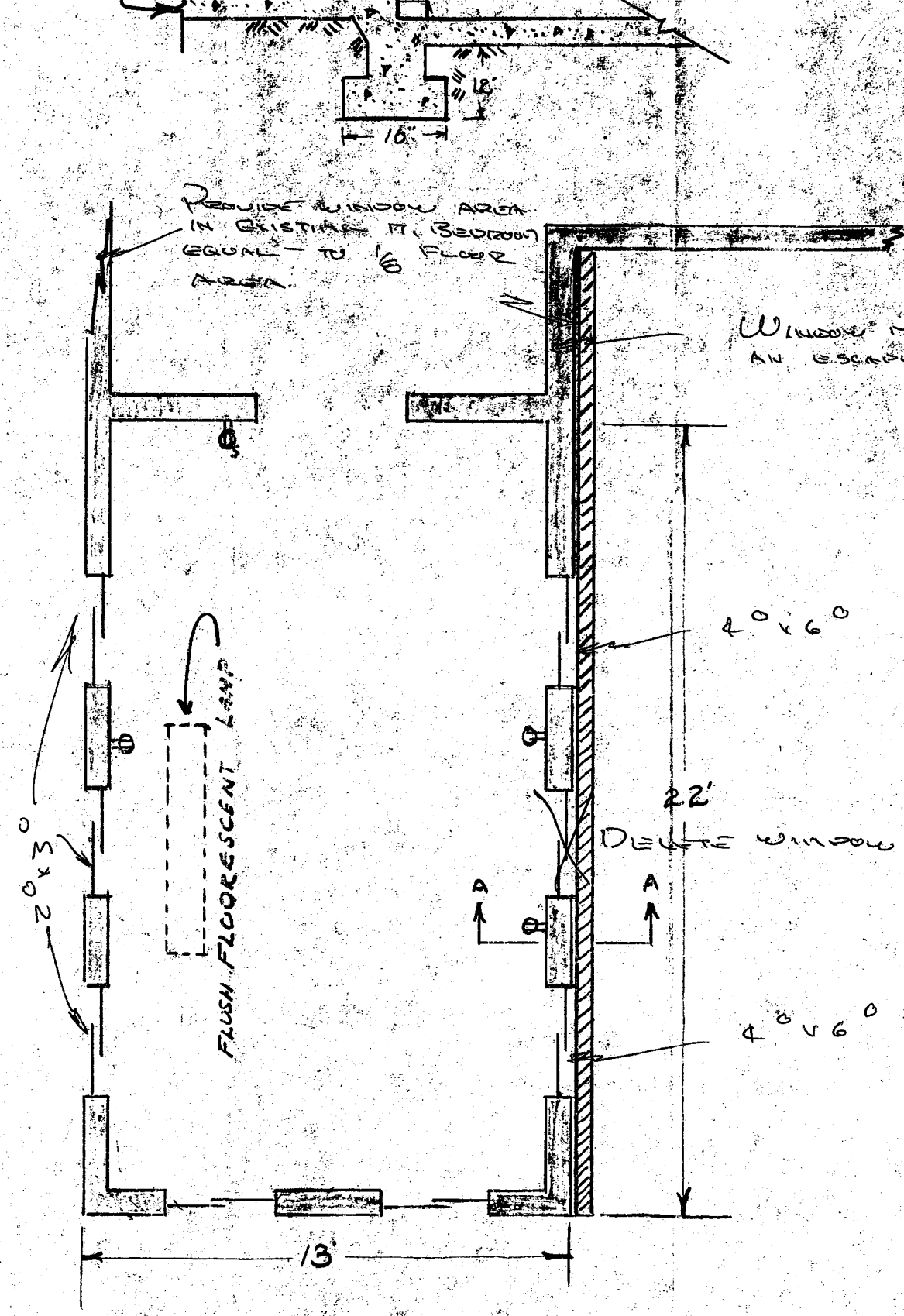

YOUNG S. KIM
20908 S. NEW HAMPSHIRE
TORRANCE, CALIF.

BUILDING AND SAFETY DIV
Department of County Eng
APPROVED
UNDER ORDINANCE No.
BY
AUG 18 196

This set of plans and specifications on the job at all times and it is un any changes or alterations on same permission from the Building and County of Los Angeles.
The stamping of this plan and speci NOT be held to permit or to be an violation of any provisions of any C of State Law.

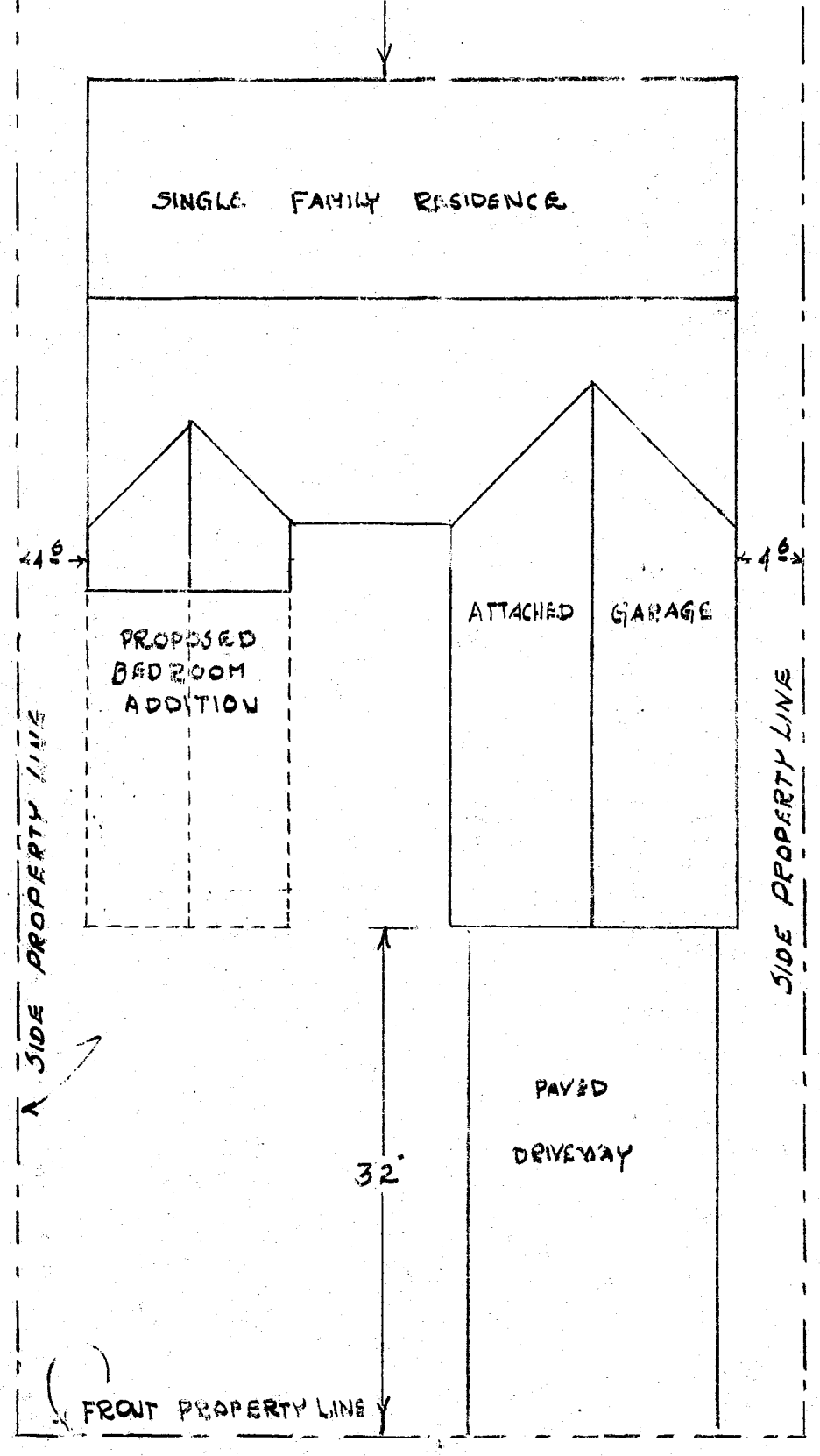

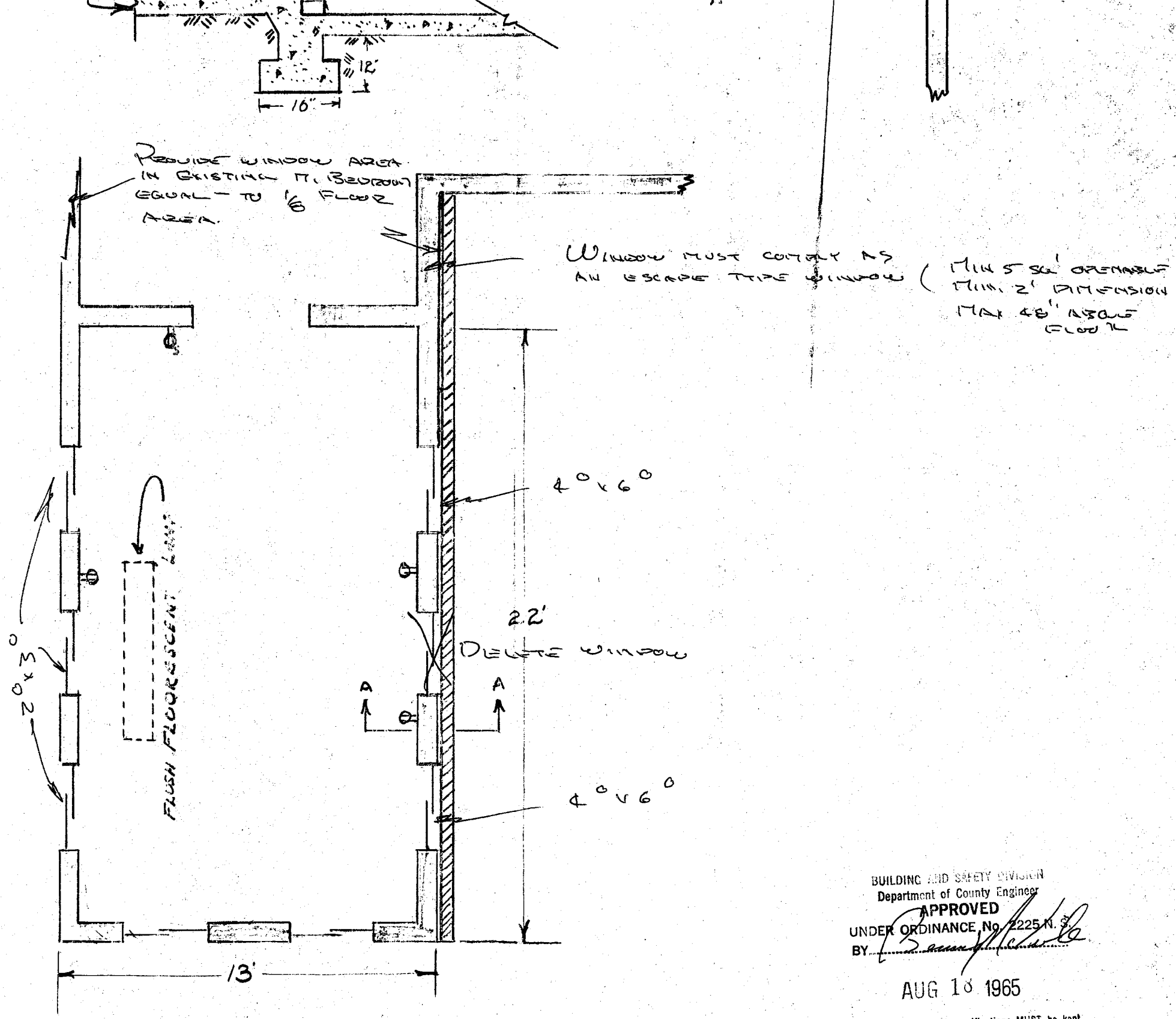

BUILDING AND SAFETY DIVISION
Department of County Engineer
APPROVED
UNDER ORDINANCE No. 2225 N.S.
BY [signature]
AUG 10 1965

This set of plans and specifications MUST be kept on the job at all times and it is unlawful to make any changes or alterations on same without written permission from the Building and Safety Division, County of Los Angeles.
The stamping of this plan and specifications SHALL NOT be held to permit or to be an approval of the violation of any provisions of any County Ordinance or State Law.

YOUNG S. KIM
20908 S. NEW HAMPSHIRE
TORRANCE, CALIF.