APPLICATION FOR BUILDING PERMIT

1

COUNTY OF LOS ANGELES — BUILDING AND SAFETY

WORKER'S COMPENSATION DECLARATION

I hereby affirm that I have a certificate of consent to self insure, or a certificate of Workers' Compensation Insurance, or a certified copy thereof (Sec. 3800, Lab. C.)

Policy No. _____ Company _____

☐ Certified copy is hereby furnished.

☐ Certified copy is filed with the county building inspection department.

Date _____ Applicant _____

CERTIFICATE OF EXEMPTION FROM WORKERS' COMPENSATION INSURANCE

(This section need not be completed if the permit is for one hundred dollars ($100) or less.)

I certify that in the performance of the work for which this permit is issued, I shall not employ any person in any manner so as to become subject to the Workers' Compensation Laws.

Date _____ Applicant _____

NOTICE TO APPLICANT: If, after making this Certificate of Exemption, you should become subject to the Workers' Compensation provisions of the Labor Code, you must forthwith comply with such provisions or this permit shall be deemed revoked.

LICENSED CONTRACTORS DECLARATION

I hereby affirm that I am licensed under provisions of Chapter 9 (commencing with Section 7000) of Division 3 of the Business and Professions Code, and my license is in full force and effect.

License Number _____ Lic. Class _____

Contractor _____ Date _____

☐ I am exempt under Sec. _____ B.&P.C. for this reason _____

Date: _____

Signature _____

☐ I, as owner of the property, or my employees with wages as their sole compensation, will do the work, and the structure is not intended or offered for sale (Section 7044, Business and Professions Code.)

☐ I, as owner of the property, am exclusively contracting with licensed contractors to construct the project (Section 7044, Business and Professions Code.)

CONSTRUCTION LENDING AGENCY

I hereby affirm that there is a construction lending agency for the performance of the work for which this permit is issued (Sec. 3097, Civ. C.)

Lender's Name _____

Lender's Address _____

I certify that I have read this application and state under penalty of perjury that the above information is correct. I agree to comply with all county ordinances and State laws relating to building construction, and hereby authorize representatives of this County to enter upon the above-mentioned property for inspection purposes.

Signature of Applicant or Agent _____ Date _____

76 A638A 20-0010 DPW 12/92

FOR APPLICANT TO FILL IN

BUILDING ADDRESS: 13938 SARANAC DR.
CITY: Whittier CA. ZIP: 90604
SIZE OF LOT: NO. OF BLDGS. NOW ON LOT: 1
TRACT: 10481 BLOCK: LOT NO.: 28
ASSESSOR MAP BOOK: 8031 PAGE: 009 PARCEL: 023
OWNER: German Michel TEL NO.: 310/9418416
ADDRESS: 13938 SARANAC DR.
CITY: Whittier CA ZIP: 90604
ARCHITECT OR ENGINEER: TEL NO.:
ADDRESS:
CONTRACTOR: OWNER TEL NO.:
ADDRESS: LIC. NO.:
CITY: LIC. CLASS:
SQ. FT. SIZE: 14x28 NO. OF STORIES: 1 NO. OF FAMILIES: 1
DESCRIPTION OF WORK: NEW Roof 14x28 OVER FAMILY ROOM EXISTING
USE OF EXISTING BLDG.: EXISTING FAMILY ROOM HAVE FLAT ROOF
APPLICANT (PRINT): German Michel TEL NO.: 310 9418416
ADDRESS: 13938 SARANAC DR. WHITTIER CA.

☐ NEW ☐ ADD ☐ ALTER ☐ REPAIR ☐ DEMOL ☐ URM

WILL THE APPLICANT OR FUTURE BUILDING OCCUPANT HANDLE A HAZARDOUS MATERIAL OR A MIXTURE CONTAINING A HAZARDOUS MATERIAL EQUAL TO OR GREATER THAN THE AMOUNTS SPECIFIED ON THE HAZARDOUS MATERIALS INFORMATION GUIDE?

YES ☐ NO ☐

WILL THE INTENDED USE OF THE BUIDLING BY THE APPLICANT OR FUTURE BUILDING OCCUPANT REQUIRE A PERMIT FOR CONSTRUCTION OR MODIFICATION FROM THE SOUTH COAST AIR QUALITY MANAGEMENT DISTRICT (SCAQMD) SEE PERMITTING CHECKLIST FOR GUIDELINES.

YES ☐ NO ☐

I HAVE READ THE HAZARDOUS MATERIALS INFORMATION GUIDE AND THE SCAQMD PERMITTING CHECKLIST. I UNDERSTAND MY REQUIREMENTS UNDER THE LOS ANGELES COUNTY CODE, TITLE 2, CHAPTER 2.20 SECTIONS 2.20.100 THROUGH 2.20.140 CONCERNING HAZARDOUS MATERIALS REPORTING AND FOR OBTAINING A PERMIT FROM THE SCAQMD.

OWNER OR AGENT

P.C. FEE: 81.53	PERMIT FEE: 96.42
	ISSUANCE FEE: 18.20
INVESTIGATION FEE	TOTAL FEE: 114.62

SEE REVERSE FOR EXPLANATORY LANGUAGE

BUILDING ADDRESS: 13938 Saranac
LOCALITY: Whittier
NEAREST CROSS ST.: Loma
USE ZONE: A1 MAP NO.: 81H277 P.P. 42980
SPECIAL CONDITIONS: expansion and carpor
WITHIN 1000 FT. OF SCHOOL? YES NO

DISTRICT	GROUP	TYPE CONST.	FIRE ZONE	PROCESSED BY
4	R3	V	3	Jeffer

STATISTICAL CLASSIFICATION: CLASS NO. 21 DWELL UNITS _____ APT CONDO

REQUIRED SET BACK	YARD	HWY	TOTAL SETBACK FROM PROP LINE	EXIST WIDTH
FRONT P L				
SIDE P L			#23	

SEWER MAP BK PG

VALUATION $ 5,000.00

$

LDMA P/C #

LDMA Perm #

FINAL DATE 2-2-96

FINAL BY Kuma

VALIDATION

02* *8153
*8153 CK TL
2d 1. *** TM
42648
09-25-95
NO 0

#1
02* *11462
*11462 CK TL
2d 1. *** TM
42650
09-25-95
NO 0

INSPECTOR COPY

PLANS TO APPLICANT				
To:		Returned		Approved
No.	Date	No.	Date	

Approvals	Required		Date Received or Approved
	Yes	No	
Water Certificate			
Health Department			
Fire Department			
Grading			
Geological			
Pedestrian Protection (Fence) (Canopy)			
Special Inspection (Conc.) (Masonry) (Welding)			
Lot Drainage			
Parking			

Approvals	Date	Inspector's Signature
Location (Setback & Yards)		
Foundations		
Slab		
Frame		
Energy Insulation		
Lath/Drywall - Interior		
Lath - Exterior		
House Number Correct & Posted		
Final - Enter on Front		
Certificate of Occupancy Issued		
Roof [illegible]	10/2/93	[illegible]

INSPECTOR'S NOTES

OWNER-BUILDER DECLARATION

I hereby affirm that I am exempt from the Contractor's License Law for the following reason. (Sec. 7031.5) *Business and Professions Code: Any city or county which requires a permit to construct, alter, improve, demolish, or repair any structure, prior to its issuance, also requires the applicant for such permit to file a signed statement that he is licensed pursuant to the provisions of the Contractor's License Law (Chapter 9) (commencing with Section 7000 of Division 3 of the Business and Professions Code) or that he is exempt therefrom and the basis for the alleged exemption. Any violation of Section 7031.5 by any applicant for a permit subjects the applicant to a civil penalty of not more than five hundred dollars ($500).:*

☐ I, as owner of the property, or my employees with wages as their sole compensation, will do the work, and the structure is not intended or offered for sale (Sec. 7044) *Business and Professions Code: The Contractor's License Law does not apply to an owner of property who builds or improves thereon, and who does such work himself or through his own employees, provided that such improvements are not intended or offered for sale. If, however, the building or improvement is sold within one year of completion, the owner-builder will have the burden of proving that he did not build or improve for the purpose of sale.*

☐ I, as owner of the property, am exclusively contracting with licensed contractors to construct the project (Sec. 7044) *Business and Professions Code: The Contractor's License Law does not apply to an owner of property who builds or improves thereon, and who contracts for such projects with a contractor(s) licensed pursuant to the Contractor's License Laws.*

☐ I am exempt under Sec. _____, B.&P.C. for this reason _____

Date _____ Owner _____

INSPECTOR'S NOTES

LICENSED CONTRACTOR'S DECLARATION

I hereby affirm under penalty of perjury that I am licensed under provisions of Chapter 9 (commencing with Section 7000) of Division 3 of the Business and Professions Code, and my license is in full force and effect.

License Class _____ *Lic. No.* _____

Date _____ *Contractor* _____

OWNER-BUILDER DECLARATION

I hereby affirm under penalty of perjury that I am exempt from the Contractors License Law for the following reason (Sec. 7031.5, Business and Professions Code: Any city or county which requires a permit to construct, alter, improve, demolish, or repair any structure, prior to its issuance, also requires the applicant for such permit to file a signed statement that he or she is licensed pursuant to the provisions of the Contractors License Law (Chapter 9 commencing with Section 7000) of Division 3 of the Business and Professions Code) or that he or she is exempt therefrom and the basis for the alleged exemption. Any violation of Section 7031.5 by any applicant for a permit subjects the applicant to a civil penalty of not more than five hundred dollars ($500).):

☐ *I, as owner of the property, or my employees with wages as their sole compensation, will do the work, and the structure is not intended or offered for sale (Sec. 7044, Business and Professions Code: The Contractors License Law does not apply to an owner of property who builds or improves thereon, and who does such work himself or herself or through his or her own employees, provided that such improvements are not intended or offered for sale. If, however, the building or improvement is sold within one year of completion, the owner-builder will have the burden of proving that he or she did not build or improve for the purpose of sale.).*

☐ *I, as owner of the property, am exclusively contracting with licensed contractors to construct the project (Sec. 7044, Business and Professions Code: The Contractors License Law does not apply to an owner of property who builds or improves thereon, and who contracts for such projects with a contractor(s) licensed pursuant to the Contractors License Law.).*

☐ *I am exempt under Sec.* _____, *B.& P.C. for this reason:*

Date 9/25/95 *Owner* German Duicker

WORKERS' COMPENSATION DECLARATION

I hereby affirm under penalty of perjury one of the following declarations:

☐ *I have and will maintain a certificate of consent to self-insure for workers' compensation, as provided for by Section 3700 of the Labor Code, for the performance of the work for which this permit is issued.*

☐ *I have and will maintain workers' compensation insurance, as required by Section 3700 of the Labor Code, for the performance of the work for which this permit is issued. My workers' compensation insurance carrier and policy number are:*

Carrier _____ *Policy Number* _____

(This section need not be completed if the permit is for one hundred dollars ($100) or less).

☐ *I certify that in the performance of the work for which this permit is issued, I shall not employ any person in any manner so as to become subject to the workers' compensation laws of California, and agree that if I should become subject to the workers' compensation provisions of Section 3700 of the Labor Code, I shall forthwith comply with those provisions.*

Date 9/25/95 *Applicant* German Duicker

WARNING: FAILURE TO SECURE WORKERS' COMPENSATION COVERAGE IS UNLAWFUL, AND SHALL SUBJECT AN EMPLOYER TO CRIMINAL PENALTIES AND CIVIL FINES UP TO ONE HUNDRED THOUSAND DOLLARS ($100,000), IN ADDITION TO THE COST OF COMPENSATION, DAMAGES AS PROVIDED FOR IN SECTION 3706 OF THE LABOR CODE, INTEREST, AND ATTORNEY'S FEES.

CONSTRUCTION LENDING AGENCY

I hereby affirm under penalty of perjury that there is a construction lending agency for the performance of the work for which this permit is issued (Sec. 3097, Civ.C.).

Lender's Name _____

Lender's Address _____

I certify that I have read this application and state under the penalty of perjury that the above information is correct. I agree to comply with all city and county ordinances and state laws relating to building construction, and hereby authorize representatives of this county to enter upon the above-mentioned property for inspection purposes.

German Duicker — 9/25/95

Signature of Applicant or Agent — *Date*

Complete this section for permits in unincorporated Los Angeles County only

LOBBYIST ORDINANCE CERTIFICATION

This is to certify that I, as permit applicant, am familiar with the requirements of Los Angeles County Code Chapter 2.160 et seq., (relating to the Los Angeles County Lobbyist Ordinance) and that all persons acting on behalf of myself complied and will continue to comply therewith through the application process.

German Michel — German Duicker

Applicant (Print Name) — *Applicant Signature*

_____ — _____

Company Name (if employed by an entity/agency) — *Date*

PLOT PLAN

SARANAC DRIVE

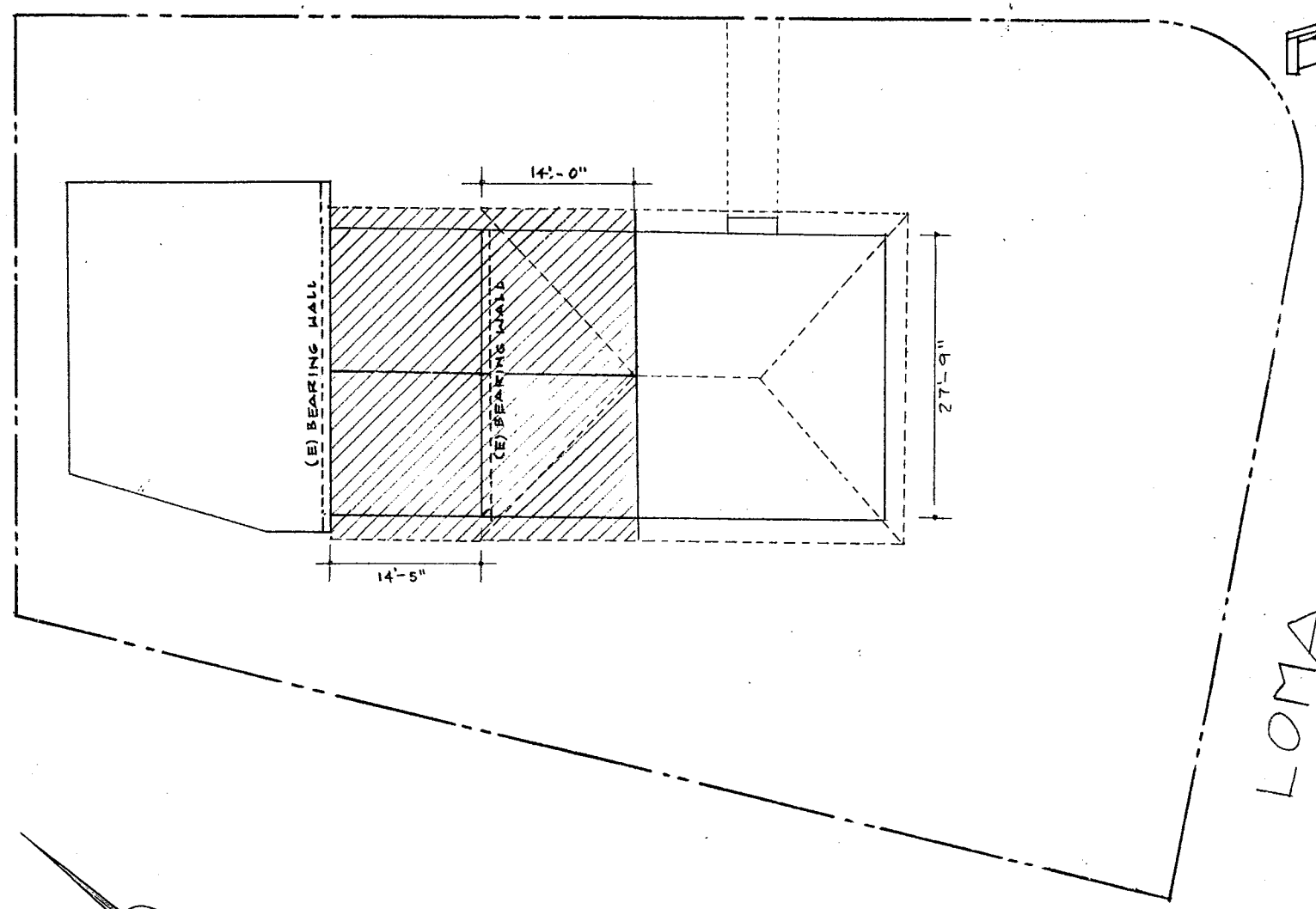

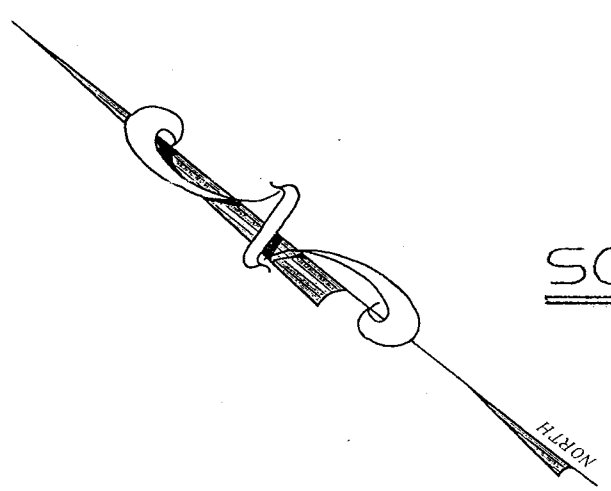

SCALE 1/16" = 1'-0"

DIVISION OF BUILDING AND SAFETY
Department of Public Works
APPROVED
UNDER TITLE 26
BY _____
SEP 25 1995

This set of plans and specifications MUST be kept on the job at all times and it is unlawful to make any changes or alterations on same without written permission from the Division of Building and Safety, County of Los Angeles. The Stamping of this plan and specifications SHALL NOT be held to permit or to be and approval of the violation of any provisions of any County Ordinance or State Law

REGISTERED PROFESSIONAL ENGINEER
FERNANDO P. NUNEZ
No. C 016581
Exp 6-30-97
9-22-95
CIVIL
STATE OF CALIFORNIA

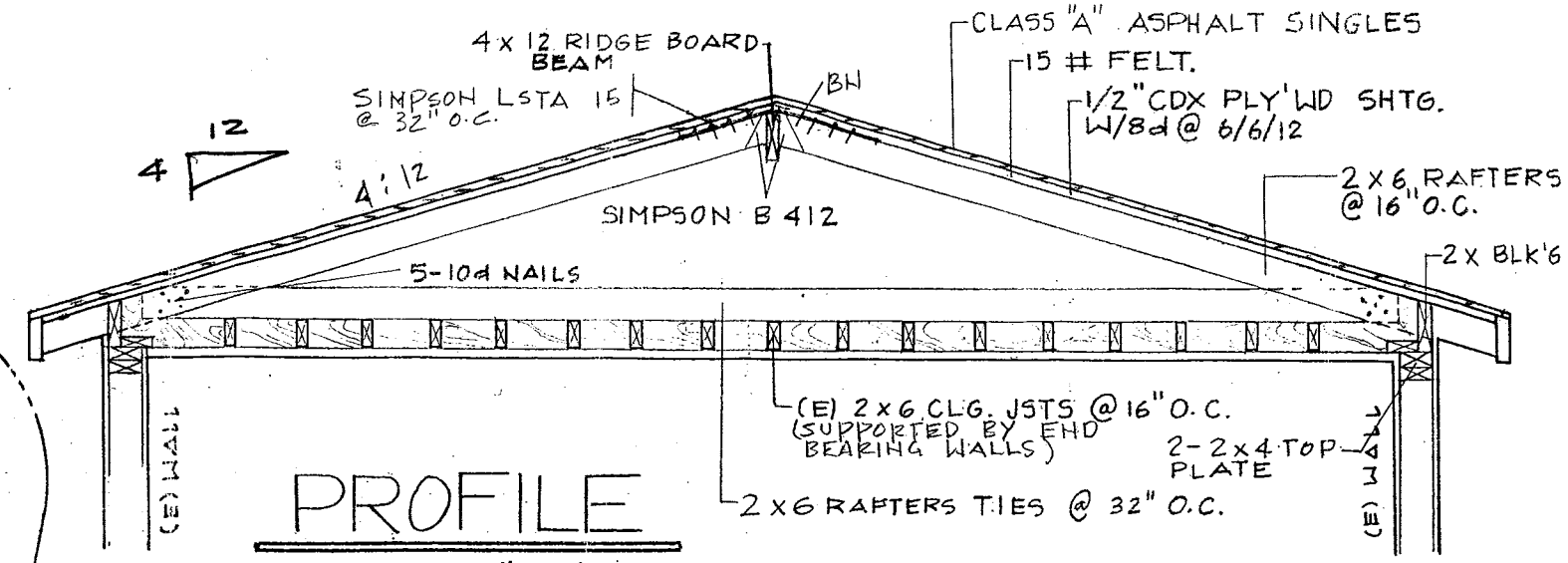

PROFILE

SCALE 1/4" = 1'-0"

RIDGE BOARD BEAM

L = 14.5' MAX.
SPAN = 13'-6"
LIVE LOAD = 16 PSF
DEAD LOAD
ROOFING = 4 PSF
SHEATHING = 2 PSF
MISC. = 2 PSF
ROOF JOIST = 2 PSF
26 PSF

LOAD PER FOOT 26 x 13.5 = 351 LB
TRY 4 x 12 (S4S)
S = 73.828 INCH^3

ALLOWABLE SPAN

$$L = \sqrt{\frac{2F_b S}{3W}} = \sqrt{\frac{2(1600)(73.828)}{3(351)}}$$

L = 15 FT > 14.5 FT ∴ OK
USE 4 x 12 RIDGE BOARD BEAM

RIDGE BEAM END SUPPORT DETAIL

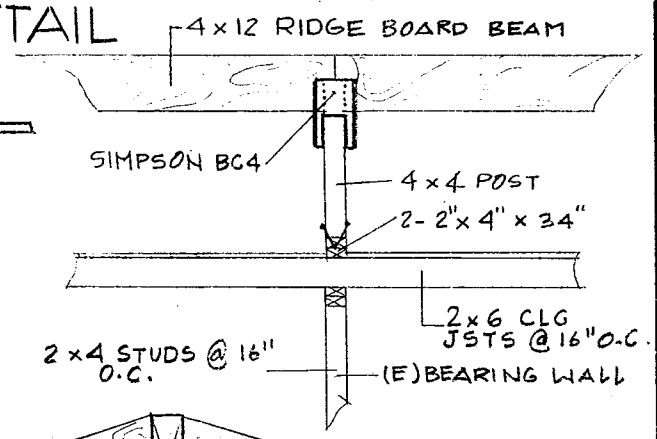

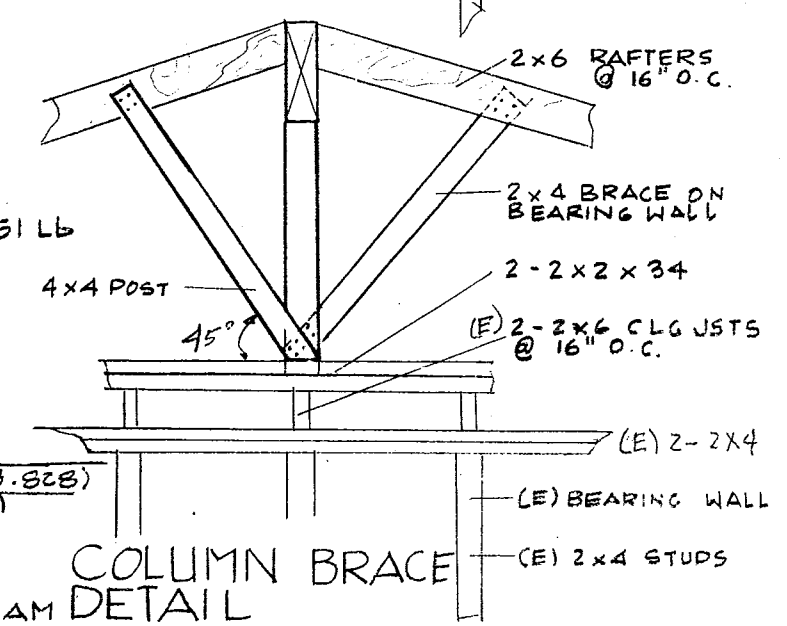

COLUMN BRACE DETAIL

NUNEZ ENGINEERING
6509 PAINTER AVE.
WHITTIER, CA 90601
(310) 945-8915

OWNER: GERMAN MICHEL
13938 SARANAC DR., WHITTIER 90604.

DATE: 9/22/95	NE: 95192	PLATE: 1