2304 SARANDI GRANDI

COUNTY OF LOS ANGELES
DEPARTMENT OF PUBLIC WORKS
BUILDING AND SAFETY / LAND DEVELOPMENT

LA PUENTE # 0200
16005 CENTRAL AVENUE
LA PUENTE CA 91744
PHONE: (626) 961-9611 EXT:

BUILDING PERMIT
ALTERATION/REPAIR
BL 0200 0706010008

LEGAL ID:
BK: 33 PG: 73 PC: 1

ASSESSOR INFORMATION NUMBER:
8205-016-032

TENANT:

OWNER: TEL. NO:
DALEO; CHARLES & NATALIE (626) 369-1228-
2308 SARANDI GRANDE
HACH CA 91745-4830

APPLICANT: TEL. NO:
SAME AS OWNER -

CONTRACTOR: TEL. NO:
SAME AS OWNER -
LIC. NO

ARCHITECT OR ENGINEER: TEL. NO:
-
LIC. NO:

MAP NO: SEWER MAP BOOK: PAGE: FIRE ZONE: CMP:
XX 4 01

NO. OF FAMILIES: DWELLING UNITS: APT/COND: STAT CLASS:
NO 21

AIR QUALITY: SCHOOL WITHIN 1000 FEET: HAZARDOUS MATERIALS:
NO NO NO

REQUIRED SET BACK YARD: HWY: TOTAL SETBACK FROM PROP LINE: EXIST WIDTH:
FRONT PL-
SIDE PL-

	SQ. FT	NO. OF STORIES	CONST TYPE
STRUCTURE:	0		VN

EXIST BLDG USE: RESID USE ZONE: R-1
EXIST OCC GRP:

BLDGS. NOW ON LOT: VALUATION: 1,000

FEES PAID

FEE DESCRIPTION:	QUANTITY:	UOM:	AMOUNT:
AA BLDG PERMIT ISSUANCE			24.40
AC STRONG MOTION RESID	1000.00	VAL	0.50
AX BUILDING REVIEW FEE			71.90
B2 PERMIT W/ENERGY	1000.00	VAL	63.03
		TOTAL FEES	159.83

REPORT ID: DPR261 ROUTE TO: BS0200

BUILDING ADDRESS:
2308 SARANDI GRANDE DR
HACH CA 917454830
NEAREST CROSS STREET:
THOMAS PAGE: 678 GRID: C4 LOCALITY: HACIENDA HTS

ISSUED ON: 06/01/07 PROCESSED BY: FM EXPIRES ON: 05/26/08

FINAL DATE: 8/14/07 FINAL BY: CODE:

DESCRIPTION OF WORK:
REMODEL 2ND FLR BATHROOM

SPECIAL CONDITIONS:

APPROVALS	DATE	INSPECTOR SIGNATURE
LOCATION AND SETBACKS		
SOILS ENGINEER APPROVAL		
FOUNDATION/TRENCH FORMS		
SLAB/UNDER FLOOR		
RAISED FLOOR FRAMING		
UNDERFLOOR INSULATION		
FLOOR SHEATHING		
ROOF SHEATHING		
SHEAR PANELS		
FRAME INSPECTION	6/4/07	
FIRE SPRINKLER HANGERS		
INSULATION/WEATHER STRIP	6/4/07	
INTERIOR LATH/DRYWALL	6/6/07	
EXTERIOR LATH	6/6/07	
RATED FLOOR/CEIL ASSEM.		
RATED WALL ASSEMBLIES		
RATED SHAFTS/OPENINGS		
T-BAR CEILINGS		
LOT DRAINAGE		

LICENSED CONTRACTOR'S DECLARATION

I hereby affirm under penalty of perjury that I am licensed under provisions of Chapter 9 (commencing with Section 7000) of Division 3 of the Business and Professions Code, and my license is in full force and effect.

License Class _____ Lic. No. _____

Contractor's Signature _____ Date _____

OWNER-BUILDER DECLARATION

I hereby affirm under penalty of perjury that I am exempt from the Contractors License Law for the following reason (Sec. 7031.5, Business and Professions Code: Any city or county which requires a permit to construct, alter, improve, demolish, or repair any structure, prior to its issuance, also requires the applicant for such permit to file a signed statement that he or she is licensed pursuant to the provisions of the Contractors License Law (Chapter 9 (commencing with Section 7000) of Division 3 of the Business and Professions Code) or that he or she is exempt therefrom and the basis for the alleged exemption. Any violation of Section 7031.5 by any applicant for a permit subjects the applicant to a civil penalty of not more than five hundred dollars ($500).):

☐ I am exempt under Sec. _____ , B.& P.C. for this reason:

_____

_____

[Electrical, Plumbing & Sewer Permits Only]

☐ I, as owner of the property, will do the work, and the structure is not intended or offered for sale (Sec. 7044, Business and Professions Code: The Contractors License Law does not apply to an owner of property who builds or improves thereon, and who does such work himself or herself, provided that such improvements are not intended or offered for sale. If, however, the building or improvement is sold within one year of completion, the owner-builder will have the burden of proving that he or she did not build or improve for the purpose of sale.).

[All Other Permits]

☑ I, as owner of the property, or my employees with wages as their sole compensation, will do the work, and the structure is not intended or offered for sale (Sec. 7044, Business and Professions Code: The Contractors License Law does not apply to an owner of property who builds or improves thereon, and who does such work himself or herself or through his or her own employees, provided that such improvements are not intended or offered for sale. If, however, the building or improvement is sold within one year of completion, the owner-builder will have the burden of proving that he or she did not build or improve for the purpose of sale.).

☐ I, as owner of the property, am exclusively contracting with licensed contractors to construct the project (Sec. 7044, Business and Professions Code: The Contractors License Law does not apply to an owner of property who builds or improves thereon, and who contracts for such projects with a contractor(s) licensed pursuant to the Contractors License Law.).

Owner Signature _____ Date 6-1-07

WORKER'S COMPENSATION DECLARATION

I hereby affirm under penalty of perjury one of the following declarations:

☐ I have and will maintain a certificate of consent to self-insure for worker's compensation, as provided for by Section 3700 of the Labor Code, for the performance of the work for which this permit is issued.

☐ I have and will maintain worker's compensation insurance, as required by Section 3700 of the Labor Code, for the performance of the work for which this permit is issued. My worker's compensation insurance carrier and policy number are:

Carrier _____

Policy Number _____

☐ I certify that in the performance of the work for which this permit is issued, I shall not employ any person in any manner so as to become subject to the worker's compensation laws of California, and agree that if I should become subject to the worker's compensation provisions of Section 3700 of the Labor Code, I shall forthwith comply with those provisions.

Applicant Signature _____ Date 6-1-07

WARNING: FAILURE TO SECURE WORKER'S COMPENSATION COVERAGE IS UNLAWFUL, AND SHALL SUBJECT AN EMPLOYER TO CRIMINAL PENALTIES AND CIVIL FINES UP TO ONE HUNDRED THOUSAND DOLLARS ($100,000), IN ADDITION TO THE COST OF COMPENSATION, DAMAGES AS PROVIDED FOR IN SECTION 3706 OF THE LABOR CODE, INTEREST, AND ATTORNEY'S FEES.

LOBBYIST ORDINANCE CERTIFICATION

[Complete this section for permits in unincorporated Los Angeles County only]

This is to certify that I, as permit applicant, am familiar with the requirements of Los Angeles County Code Chapter 2.160 et seq., (relating to the Los Angeles County Lobbyist Ordinance) and that all persons acting on behalf of myself complied and will continue to comply therewith through the application process.

Applicant (Print Name) _____ Applicant Signature _____

Company Name (if employed by an entity/agency) _____ Date _____

JOB ADDRESS
LOCALITY

HAZARDOUS MATERIAL DECLARATION

Will the applicant or future building occupant handle a hazardous material or a mixture containing a hazardous material equal to or greater than the amount specified on the hazardous materials information guide?

Yes ☐ No ☐

Will the intended use of the building by the applicant or future building occupant require a permit for construction or modification from the South Coast Air Quality Management District (SCAQMD)? See permitting checklist for guidelines.

Yes ☐ No ☐

I have read the hazardous materials information guide and the SCAQMD permitting checklist, I understand my requirements under the Los Angeles County Code Title 2, Chapter 220 Sections 220.100 through 220.140 concerning hazardous material reporting and for obtaining a permit from the SCAQMD.

ASBESTOS NOTIFICATION

☐ Notification letter sent to SCAQMD or EPA

☐ I declare that notification of asbestos removal is not applicable to addressed project.

CONSTRUCTION LENDING AGENCY

I hereby affirm under penalty of perjury that there is a construction lending agency for the performance of the work for which this permit is issued (Sec. 3097, Civ.C.).

Lender's Name _____

Lender's Address _____

I certify that I have read this application and state under the penalty of perjury that the above information is correct. I agree to comply with all City and County ordinances and State laws relating to building construction, and hereby authorize representatives of this County to enter upon the above-mentioned property for inspection purposes.

Applicant or Agent Signature _____ Date 6-1-07

COUNTY OF LOS ANGELES
DEPARTMENT OF PUBLIC WORKS
BUILDING AND SAFETY / LAND DEVELOPMENT

LA PUENTE
16005 CENTRAL AVENUE
LA PUENTE CA 91744
PHONE: (626) 961-9611 EXT:

0200

ELECTRICAL PERMIT
EL 0200 0706010003

LEGAL ID:
BK: 33 PG: 73 PC: 1

ASSESSOR INFORMATION NUMBER:
8205-016-032

TENANT:

OWNER: TEL. NO:
DALEO; CHARLES & NATALIE (626) 369-1228-
2308 SARANDI GRANDE
HACH CA 91745-4830

APPLICANT: TEL. NO:
SAME AS OWNER -

CONTRACTOR: TEL. NO:
SAME AS OWNER -
LIC. NO

ARCHITECT OR ENGINEER: TEL. NO:
-
LIC. NO:

FEES PAID

FEE DESCRIPTION:	QUANTITY:	UOM:	AMOUNT:
A1 PERMIT ISSUANCE FEE			24.40
G1 OUTLETS-LGT,SW,RECP	7.00	OUT	13.30
G2 LIGHTING FIXTURES	3.00	LGT	5.70
H7 RES EXHAUST FANS	1.00	EX	9.40
TOTAL FEES			52.80

REPORT ID: DPR265 ROUTE TO: BS0200

BUILDING ADDRESS:
2308 SARANDI GRANDE DR
HACH CA 917454830
NEAREST CROSS STREET:
THOMAS PAGE: 678 GRID: C4 LOCALITY: HACIENDA HTS

ISSUED ON:	PROCESSED BY:	PLAN BY:	EXPIRES ON:
06/01/07	FM		11/28/07

FINAL DATE: 8/14/07 FINAL BY: CODE:

DESCRIPTION OF WORK
ELECTRICAL FOR BATHROOM REMODEL

SPECIAL CONDITIONS:

APPROVALS	DATE	INSPECTOR SIGNATURE
TEMPORARY POWER POLE		
UNDERGROUND CONDUIT		
UFER GROUND		
ROUGH CONDUIT		
ROUGH WIRING	6/4/07	
MAIN WATER LINE PLASTIC Y/N METAL Y/N		
UTILITY COMPANY NOTIFIED		

LICENSED CONTRACTOR'S DECLARATION

I hereby affirm under penalty of perjury that I am licensed under provisions of Chapter 9 (commencing with Section 7000) of Division 3 of the Business and Professions Code, and my license is in full force and effect.

License Class _____ Lic. No. _____

Contractor's Signature _____ Date _____

OWNER-BUILDER DECLARATION

I hereby affirm under penalty of perjury that I am exempt from the Contractors License Law for the following reason (Sec. 7031.5, Business and Professions Code: Any city or county which requires a permit to construct, alter, improve, demolish, or repair any structure, prior to its issuance, also requires the applicant for such permit to file a signed statement that he or she is licensed pursuant to the provisions of the Contractors License Law (Chapter 9 (commencing with Section 7000) of Division 3 of the Business and Professions Code) or that he or she is exempt therefrom and the basis for the alleged exemption. Any violation of Section 7031.5 by any applicant for a permit subjects the applicant to a civil penalty of not more than five hundred dollars ($500).):

☐ I am exempt under Sec. _____ , B.& P.C. for this reason:

_____

_____

[Electrical, Plumbing & Sewer Permits Only]

☑ I, as owner of the property, will do the work, and the structure is not intended or offered for sale (Sec. 7044, Business and Professions Code: The Contractors License Law does not apply to an owner of property who builds or improves thereon, and who does such work himself or herself, provided that such improvements are not intended or offered for sale. If, however, the building or improvement is sold within one year of completion, the owner-builder will have the burden of proving that he or she did not build or improve for the purpose of sale.).

[All Other Permits]

☐ I, as owner of the property, or my employees with wages as their sole compensation, will do the work, and the structure is not intended or offered for sale (Sec. 7044, Business and Professions Code: The Contractors License Law does not apply to an owner of property who builds or improves thereon, and who does such work himself or herself or through his or her own employees, provided that such improvements are not intended or offered for sale. If, however, the building or improvement is sold within one year of completion, the owner-builder will have the burden of proving that he or she did not build or improve for the purpose of sale.).

☐ I, as owner of the property, am exclusively contracting with licensed contractors to construct the project (Sec. 7044, Business and Professions Code: The Contractors License Law does not apply to an owner of property who builds or improves thereon, and who contracts for such projects with a contractor(s) licensed pursuant to the Contractors License Law.).

Owner Signature _____ Date 6-1-07

WORKER'S COMPENSATION DECLARATION

I hereby affirm under penalty of perjury one of the following declarations:

☐ I have and will maintain a certificate of consent to self-insure for worker's compensation, as provided for by Section 3700 of the Labor Code, for the performance of the work for which this permit is issued.

☐ I have and will maintain worker's compensation insurance, as required by Section 3700 of the Labor Code, for the performance of the work for which this permit is issued. My worker's compensation insurance carrier and policy number are:

Carrier _____

Policy Number _____

☐ I certify that in the performance of the work for which this permit is issued, I shall not employ any person in any manner so as to become subject to the worker's compensation laws of California, and agree that if I should become subject to the worker's compensation provisions of Section 3700 of the Labor Code, I shall forthwith comply with those provisions.

Applicant Signature _____ Date 6-1-07

WARNING: FAILURE TO SECURE WORKER'S COMPENSATION COVERAGE IS UNLAWFUL, AND SHALL SUBJECT AN EMPLOYER TO CRIMINAL PENALTIES AND CIVIL FINES UP TO ONE HUNDRED THOUSAND DOLLARS ($100,000), IN ADDITION TO THE COST OF COMPENSATION, DAMAGES AS PROVIDED FOR IN SECTION 3706 OF THE LABOR CODE, INTEREST, AND ATTORNEY'S FEES.

LOBBYIST ORDINANCE CERTIFICATION

[Complete this section for permits in unincorporated Los Angeles County only]

This is to certify that I, as permit applicant, am familiar with the requirements of Los Angeles County Code Chapter 2.160 et seq., (relating to the Los Angeles County Lobbyist Ordinance) and that all persons acting on behalf of myself complied and will continue to comply therewith through the application process.

Applicant (Print Name) _____ Applicant Signature _____

Company Name (if employed by an entity/agency) _____ Date _____

JOB ADDRESS
LOCALITY

HAZARDOUS MATERIAL DECLARATION

Will the applicant or future building occupant handle a hazardous material or a mixture containing a hazardous material equal to or greater than the amount specified on the hazardous materials information guide?

Yes ☐ No ☐

Will the intended use of the building by the applicant or future building occupant require a permit for construction or modification from the South Coast Air Quality Management District (SCAQMD)? See permitting checklist for guidelines.

Yes ☐ No ☐

I have read the hazardous materials information guide and the SCAQMD permitting checklist, I understand my requirements under the Los Angeles County Code Title 2, Chapter 220 Sections 220.100 through 220.140 concerning hazardous material reporting and for obtaining a permit from the SCAQMD.

ASBESTOS NOTIFICATION

☐ Notification letter sent to SCAQMD or EPA

☐ I declare that notification of asbestos removal is not applicable to addressed project.

CONSTRUCTION LENDING AGENCY

I hereby affirm under penalty of perjury that there is a construction lending agency for the performance of the work for which this permit is issued (Sec. 3097, Civ.C.).

Lender's Name _____

Lender's Address _____

I certify that I have read this application and state under the penalty of perjury that the above information is correct. I agree to comply with all City and County ordinances and State laws relating to building construction, and hereby authorize representatives of this County to enter upon the above-mentioned property for inspection purposes.

Applicant or Agent Signature _____ **Date** 6-1-07

COUNTY OF LOS ANGELES
DEPARTMENT OF PUBLIC WORKS
BUILDING AND SAFETY / LAND DEVELOPMENT

LA PUENTE
16005 CENTRAL AVENUE
LA PUENTE CA 91744
PHONE: (626) 961-9611 EXT:

0200

PLUMBING PERMIT
PL 0200 0706010002

LEGAL ID:
BK: 33 PG: 73 PC: 1

ASSESSOR INFORMATION NUMBER:
8205-016-032

TENANT:

OWNER: TEL. NO:
DALEO; CHARLES & NATALIE (626) 369-1228-
2308 SARANDI GRANDE
HACH CA 91745-4830

APPLICANT: TEL. NO:
SAME AS OWNER -

CONTRACTOR: TEL. NO:
SAME AS OWNER -
LIC. NO

ARCHITECT OR ENGINEER: TEL. NO:
-
LIC. NO:

FEES PAID

FEE DESCRIPTION:	QUANTITY:	UOM:	AMOUNT:
01 PERMIT ISSUANCE FEE			24.40
07 BATHTUBS/SHOWERS	1.00	FIX	14.20
25 LAVATORIES / SINKS	1.00	FIX	14.20
45 WATER CLOSET/URINAL	1.00	FIX	14.20
TOTAL FEES			67.00

REPORT ID: DPR263 ROUTE TO: BS0200

BUILDING ADDRESS:
2308 SARANDI GRANDE DR
HACH CA 917454830
NEAREST CROSS STREET:
THOMAS PAGE: 678 GRID: C4 LOCALITY: HACIENDA HTS

ISSUED ON:	PROCESSED BY:	PLAN BY:	EXPIRES ON:
06/01/07	FM		11/28/07

FINAL DATE 8/14/07 FINAL BY: CODE:

DESCRIPTION OF WORK
PLUMBING FOR BATHROOM REMODEL

SPECIAL CONDITIONS:

APPROVALS	DATE	INSPECTOR SIGNATURE
UNDER SLAB WORK		
WATER SERVICE PLASTIC Y/N METAL Y/N		
ROUGH PLUMBING	6/14/07	
GAS PIPING		
GAS VENT		
HOT WATER HEATER		
PLUMBING FIXTURES	8/14/07	
LAWN SPRINKLERS		
GAS TEST		
UTILITY COMPANY NOTIFIED		
CWV		
GRAY WATER SYSTEM		

LICENSED CONTRACTOR'S DECLARATION

I hereby affirm under penalty of perjury that I am licensed under provisions of Chapter 9 (commencing with Section 7000) of Division 3 of the Business and Professions Code, and my license is in full force and effect.

License Class _____ Lic. No. _____

Contractor's Signature _____ Date _____

OWNER-BUILDER DECLARATION

I hereby affirm under penalty of perjury that I am exempt from the Contractors License Law for the following reason (Sec. 7031.5, Business and Professions Code: Any city or county which requires a permit to construct, alter, improve, demolish, or repair any structure, prior to its issuance, also requires the applicant for such permit to file a signed statement that he or she is licensed pursuant to the provisions of the Contractors License Law (Chapter 9 (commencing with Section 7000) of Division 3 of the Business and Professions Code) or that he or she is exempt therefrom and the basis for the alleged exemption. Any violation of Section 7031.5 by any applicant for a permit subjects the applicant to a civil penalty of not more than five hundred dollars ($500).):

☐ I am exempt under Sec. _____ , B.& P.C. for this reason:

_____

_____

[Electrical, Plumbing & Sewer Permits Only]

☑ I, as owner of the property, will do the work, and the structure is not intended or offered for sale (Sec. 7044, Business and Professions Code: The Contractors License Law does not apply to an owner of property who builds or improves thereon, and who does such work himself or herself, provided that such improvements are not intended or offered for sale. If, however, the building or improvement is sold within one year of completion, the owner-builder will have the burden of proving that he or she did not build or improve for the purpose of sale.).

[All Other Permits]

☐ I, as owner of the property, or my employees with wages as their sole compensation, will do the work, and the structure is not intended or offered for sale (Sec. 7044, Business and Professions Code: The Contractors License Law does not apply to an owner of property who builds or improves thereon, and who does such work himself or herself or through his or her own employees, provided that such improvements are not intended or offered for sale. If, however, the building or improvement is sold within one year of completion, the owner-builder will have the burden of proving that he or she did not build or improve for the purpose of sale.).

☐ I, as owner of the property, am exclusively contracting with licensed contractors to construct the project (Sec. 7044, Business and Professions Code: The Contractors License Law does not apply to an owner of property who builds or improves thereon, and who contracts for such projects with a contractor(s) licensed pursuant to the Contractors License Law.).

Owner Signature _____ Date 6-1-07

WORKER'S COMPENSATION DECLARATION

I hereby affirm under penalty of perjury one of the following declarations:

☐ I have and will maintain a certificate of consent to self-insure for worker's compensation, as provided for by Section 3700 of the Labor Code, for the performance of the work for which this permit is issued.

☐ I have and will maintain worker's compensation insurance, as required by Section 3700 of the Labor Code, for the performance of the work for which this permit is issued. My worker's compensation insurance carrier and policy number are:

Carrier _____

Policy Number _____

☐ I certify that in the performance of the work for which this permit is issued, I shall not employ any person in any manner so as to become subject to the worker's compensation laws of California, and agree that if I should become subject to the worker's compensation provisions of Section 3700 of the Labor Code, I shall forthwith comply with those provisions.

Applicant Signature _____ Date 6-1-07

WARNING: FAILURE TO SECURE WORKER'S COMPENSATION COVERAGE IS UNLAWFUL, AND SHALL SUBJECT AN EMPLOYER TO CRIMINAL PENALTIES AND CIVIL FINES UP TO ONE HUNDRED THOUSAND DOLLARS ($100,000), IN ADDITION TO THE COST OF COMPENSATION, DAMAGES AS PROVIDED FOR IN SECTION 3706 OF THE LABOR CODE, INTEREST, AND ATTORNEY'S FEES.

LOBBYIST ORDINANCE CERTIFICATION

[Complete this section for permits in unincorporated Los Angeles County only]

This is to certify that I, as permit applicant, am familiar with the requirements of Los Angeles County Code Chapter 2.160 et seq., (relating to the Los Angeles County Lobbyist Ordinance) and that all persons acting on behalf of myself complied and will continue to comply therewith through the application process.

Applicant (Print Name) _____ Applicant Signature _____

Company Name (if employed by an entity/agency) _____ Date _____

JOB ADDRESS
LOCALITY

HAZARDOUS MATERIAL DECLARATION

Will the applicant or future building occupant handle a hazardous material or a mixture containing a hazardous material equal to or greater than the amount specified on the hazardous materials information guide?

Yes ☐ No ☐

Will the intended use of the building by the applicant or future building occupant require a permit for construction or modification from the South Coast Air Quality Management District (SCAQMD)? See permitting checklist for guidelines.

Yes ☐ No ☐

I have read the hazardous materials information guide and the SCAQMD permitting checklist, I understand my requirements under the Los Angeles County Code Title 2, Chapter 220 Sections 220.100 through 220.140 concerning hazardous material reporting and for obtaining a permit from the SCAQMD.

ASBESTOS NOTIFICATION

☐ Notification letter sent to SCAQMD or EPA

☐ I declare that notification of asbestos removal is not applicable to addressed project.

CONSTRUCTION LENDING AGENCY

I hereby affirm under penalty of perjury that there is a construction lending agency for the performance of the work for which this permit is issued (Sec. 3097, Civ.C.).

Lender's Name _____

Lender's Address _____

I certify that I have read this application and state under the penalty of perjury that the above information is correct. I agree to comply with all City and County ordinances and State laws relating to building construction, and hereby authorize representatives of this County to enter upon the above-mentioned property for inspection purposes.

Applicant or Agent Signature _____ **Date** 6-1-07

COUNTY OF LOS ANGELES
DEPARTMENT OF PUBLIC WORKS
BUILDING AND SAFETY / LAND DEVELOPMENT

LA PUENTE
16005 CENTRAL AVENUE
LA PUENTE CA 91744
PHONE: (626) 961-9611 EXT:

0200

MECHANICAL PERMIT
ME 0200 0706010002

LEGAL ID:
BK: 33 PG: 73 PC: 1

ASSESSOR INFORMATION NUMBER:
8205-016-032

TENANT:

OWNER: TEL. NO:
DALEO; CHARLES & NATALIE (626) 369-1228-
2308 SARANDI GRANDE
HACH CA 91745-4830

APPLICANT: TEL. NO:
SAME AS OWNER -

CONTRACTOR: TEL. NO:
SAME AS OWNER -
LIC. NO

ARCHITECT OR ENGINEER: TEL. NO:
-
LIC. NO:

FEES PAID

FEE DESCRIPTION:	QUANTITY: UOM:	AMOUNT:
01 PERMIT ISSUANCE FEE		24.40
41 SINGLE REGISTER FANS	1.00 FAN	13.90
	TOTAL FEES	38.30

REPORT ID: DPR264 ROUTE TO: BS0200

BUILDING ADDRESS:
2308 SARANDI GRANDE DR
HACH CA 917454830
NEAREST CROSS STREET:
THOMAS PAGE: 678 GRID: C4 LOCALITY: HACIENDA HTS

ISSUED ON:	PROCESSED BY:	PLAN BY:	EXPIRES ON:
06/01/07	FM		11/28/07

FINAL DATE: 8/14/07 FINAL BY: CODE:

DESCRIPTION OF WORK
MECHANICAL FOR BATHROOM REMODEL

SPECIAL CONDITIONS:

APPROVALS	DATE	INSPECTOR SIGNATURE
FAU/WALL FURNACE		
COMBUSTION AIR OPENINGS		
DUCT WORK	6/4/07	
AC/COMPRESSOR		
THERMOSTAT		
FIRE DAMPERS		
SMOKE DETECTION DEVICES		
COMMERCIAL HOOD		

LICENSED CONTRACTOR'S DECLARATION

I hereby affirm under penalty of perjury that I am licensed under provisions of Chapter 9 (commencing with Section 7000) of Division 3 of the Business and Professions Code, and my license is in full force and effect.

License Class _____ Lic. No. _____

Contractor's Signature _____ Date _____

OWNER-BUILDER DECLARATION

I hereby affirm under penalty of perjury that I am exempt from the Contractors License Law for the following reason (Sec. 7031.5, Business and Professions Code: Any city or county which requires a permit to construct, alter, improve, demolish, or repair any structure, prior to its issuance, also requires the applicant for such permit to file a signed statement that he or she is licensed pursuant to the provisions of the Contractors License Law (Chapter 9 (commencing with Section 7000) of Division 3 of the Business and Professions Code) or that he or she is exempt therefrom and the basis for the alleged exemption. Any violation of Section 7031.5 by any applicant for a permit subjects the applicant to a civil penalty of not more than five hundred dollars ($500).):

☐ I am exempt under Sec. _____ , B.& P.C. for this reason:

_____

_____

[Electrical, Plumbing & Sewer Permits Only]

☐ I, as owner of the property, will do the work, and the structure is not intended or offered for sale (Sec. 7044, Business and Professions Code: The Contractors License Law does not apply to an owner of property who builds or improves thereon, and who does such work himself or herself, provided that such improvements are not intended or offered for sale. If, however, the building or improvement is sold within one year of completion, the owner-builder will have the burden of proving that he or she did not build or improve for the purpose of sale.).

[All Other Permits]

☐ I, as owner of the property, or my employees with wages as their sole compensation, will do the work, and the structure is not intended or offered for sale (Sec. 7044, Business and Professions Code: The Contractors License Law does not apply to an owner of property who builds or improves thereon, and who does such work himself or herself or through his or her own employees, provided that such improvements are not intended or offered for sale. If, however, the building or improvement is sold within one year of completion, the owner-builder will have the burden of proving that he or she did not build or improve for the purpose of sale.).

☐ I, as owner of the property, am exclusively contracting with licensed contractors to construct the project (Sec. 7044, Business and Professions Code: The Contractors License Law does not apply to an owner of property who builds or improves thereon, and who contracts for such projects with a contractor(s) licensed pursuant to the Contractors License Law.).

Owner Signature _____ Date 6-1-07

WORKER'S COMPENSATION DECLARATION

I hereby affirm under penalty of perjury one of the following declarations:

☐ I have and will maintain a certificate of consent to self-insure for worker's compensation, as provided for by Section 3700 of the Labor Code, for the performance of the work for which this permit is issued.

☐ I have and will maintain worker's compensation insurance, as required by Section 3700 of the Labor Code, for the performance of the work for which this permit is issued. My worker's compensation insurance carrier and policy number are:

Carrier _____

Policy Number _____

☐ I certify that in the performance of the work for which this permit is issued, I shall not employ any person in any manner so as to become subject to the worker's compensation laws of California, and agree that if I should become subject to the worker's compensation provisions of Section 3700 of the Labor Code, I shall forthwith comply with those provisions.

Applicant Signature _____ Date 6-1-07

WARNING: FAILURE TO SECURE WORKER'S COMPENSATION COVERAGE IS UNLAWFUL, AND SHALL SUBJECT AN EMPLOYER TO CRIMINAL PENALTIES AND CIVIL FINES UP TO ONE HUNDRED THOUSAND DOLLARS ($100,000), IN addition TO THE COST OF COMPENSATION, DAMAGES AS PROVIDED FOR IN SECTION 3706 OF THE LABOR CODE, INTEREST, AND ATTORNEY'S FEES.

LOBBYIST ORDINANCE CERTIFICATION

[Complete this section for permits in unincorporated Los Angeles County only]

This is to certify that I, as permit applicant, am familiar with the requirements of Los Angeles County Code Chapter 2.160 et seq., (relating to the Los Angeles County Lobbyist Ordinance) and that all persons acting on behalf of myself complied and will continue to comply therewith through the application process.

Applicant (Print Name) _____ Applicant Signature _____

Company Name (if employed by an entity/agency) _____ Date _____

JOB ADDRESS
LOCALITY

HAZARDOUS MATERIAL DECLARATION

Will the applicant or future building occupant handle a hazardous material or a mixture containing a hazardous material equal to or greater than the amount specified on the hazardous materials information guide?

Yes ☐ No ☐

Will the intended use of the building by the applicant or future building occupant require a permit for construction or modification from the South Coast Air Quality Management District (SCAQMD)? See permitting checklist for guidelines.

Yes ☐ No ☐

I have read the hazardous materials information guide and the SCAQMD permitting checklist, I understand my requirements under the Los Angeles County Code Title 2, Chapter 220 Sections 220.100 through 220.140 concerning hazardous material reporting and for obtaining a permit from the SCAQMD.

ASBESTOS NOTIFICATION

☐ Notification letter sent to SCAQMD or EPA

☐ I declare that notification of asbestos removal is not applicable to addressed project.

CONSTRUCTION LENDING AGENCY

I hereby affirm under penalty of perjury that there is a construction lending agency for the performance of the work for which this permit is issued (Sec. 3097, Civ.C.).

Lender's Name _____

Lender's Address _____

I certify that I have read this application and state under the penalty of perjury that the above information is correct. I agree to comply with all City and County ordinances and State laws relating to building construction, and hereby authorize representatives of this County to enter upon the above-mentioned property for inspection purposes.

Applicant or Agent Signature _____ **Date** 6-1-07

OWNER-BUILDER VERIFICATION

Attention Property Owner:

An owner-builder building permit has been applied for in your name and bearing your signature. Please complete and return this information in the envelope provided at your earliest opportunity to avoid unnecessary delay in processing and issuing your building permit. No building permit will be issued until this verification is received.

1. I personally plan to provide the major labor and materials for construction of the proposed property improvement (yes or no) _____

2. I (have/havenot) _____ signed an application for a building permit for the proposed work.

3. I have contracted with the following person (firm) to provide the proposed construction:

Name: OWNER

Address : _____ City _____

Phone: _____ Contractors License No.: _____

4. I plan to provide portions of the work, but I have hired the following person to coordinate, supervise, and provide the major work:

Name: OWNER

Address : _____ City _____

Phone: _____ Contractors License No.: _____

5. I will provide some of the work but I have contracted (hired) the following persons to provide the work indicated:

Name: OWNER CHUCK DALEO

Address: 2308 SAMANDI GRANDE DR City HAC. HTS

Phone: 626-369-1228 Type of Work : RES.

Signed: Chuck D

Property owner: "

Date: 6-1-07

OWNER-BUILDER INFORMATION

Dear Property Owner:

An application for a building permit has been submitted in your name listing yourself as the builder of the property improvements specified.

For your protection you should be aware that as owner-builder you are the responsible party of record on such a permit. Building permits are not required to be signed by property owners unless they are personally performing their own work. If your work is being performed by someone other than yourself, you may protect yourself from possible liability if that person applies for the proper permit in his or her name.

Contractors are required by law to be licensed and bonded by the State of California and to have a business license from the city or county. They are also required by law to put their license number on all permits for which they apply.

If you plan to do your own work, with the exception of various trades that you plan to subcontract, you should be aware of the following information for your benefit and protection:

If you employ or otherwise engage any persons other than your immediate family, and the work (including materials and other costs) is $200 or more for the entire project, and such persons are not licensed as contractors or subcontractors, then you may be an employer.

If you are an employer, you must register with the state and federal government as an employer and you are subject to several obligations including state and federal income tax withholding, federal social security taxes, workers' compensation insurance, disability insurance costs, and unemployment compensation contributions.

There may be financial risks for you if you do not carry out these obligations, and these risks are especially serious with respect to workers' compensation insurance.

For more specific information about your obligations under federal law, contact the Internal Revenue Service (and, if you wish, the U.S. Small Business Administration) . For more specific information about your obligations under state law, contact the Department of Benefit Payments and the Division of Industrial Accidents.

If the structure is intended for sale, property owners who are not licensed contractors are allowed to perform their work personally or through their own employees, without a licensed contractor or subcontractor, only under limited conditions.

A frequent practice of unlicensed persons professing to be contractors is to secure an "owner-builder" building permit, erroneously implying that the property owner is providing his or her own labor and material personally. Building permits are not required to be signed by property owners unless they are performing their own work personally.

Information about licensed contractors may be obtained by contacting the Contractors' State License Board in your community or at 1020 N Street, Sacramento, California 95814.

Please complete and return the enclosed owner-builder verification form so that we can confirm that you are aware of these matters. The building permit will not be issued until the verification is returned.

****** Important ******

Dear Home Owner:

It is your right and privileges to build your own house and this office is very happy to issue you a permit as an owner builder.

Do you know you are fully responsible for any accident or injury occurred during the construction when you are acting as an owner builder? Therefore, if you hired a contractor and you were suggested by your contractor to pull the permit as an owner builder, we would like to advise you to check with California State Contractor License Board at 1-800-321-2752 or 626-815-8469, and your home insurance company for any applicable laws and your home insurance policy.

If you understand the laws and fully aware the responsibilities as an owner builder, you are assumed that you possess minimum knowledge about construction such as reading the approved architectural and structural plans, inspection process, etc.

This office is willing to help you to facilitate your construction process and we also deeply appreciate that you will help us by following the laws. Due to the limitation of our resources, we can only perform inspection on your construction per approved sets of plan for life safety purpose.

Again, thank you for your understanding and cooperation.

County of Los Angeles
Department of Public Works
Building and Safety Division
La Puente Office

I have read and understood the statement above and I hereby declare that I understand the construction and I will follow all the applicable laws and approved plans.

Home Owner's Name (print): CHUCK DALEO

Signature: [signature]

Building Address: 2308 SARANDI GRANDE DR.
HACIENDA HEIGHTS, CA 91745

Chuck and Natalie Daleo
2308 Sarandi Grande Dr.
Hacienda Heights, California

2nd Floor Bath Remodel

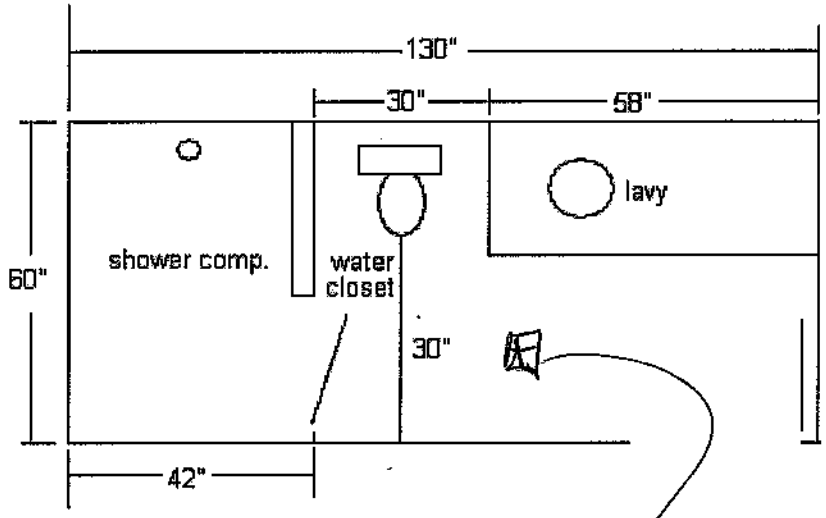

Floor Plan (NTS)

mechanical
Exhaust
FAN
5 AIR/CHANGES PER HR

Plan Layout OK.
Jean Marshall 6-1-07

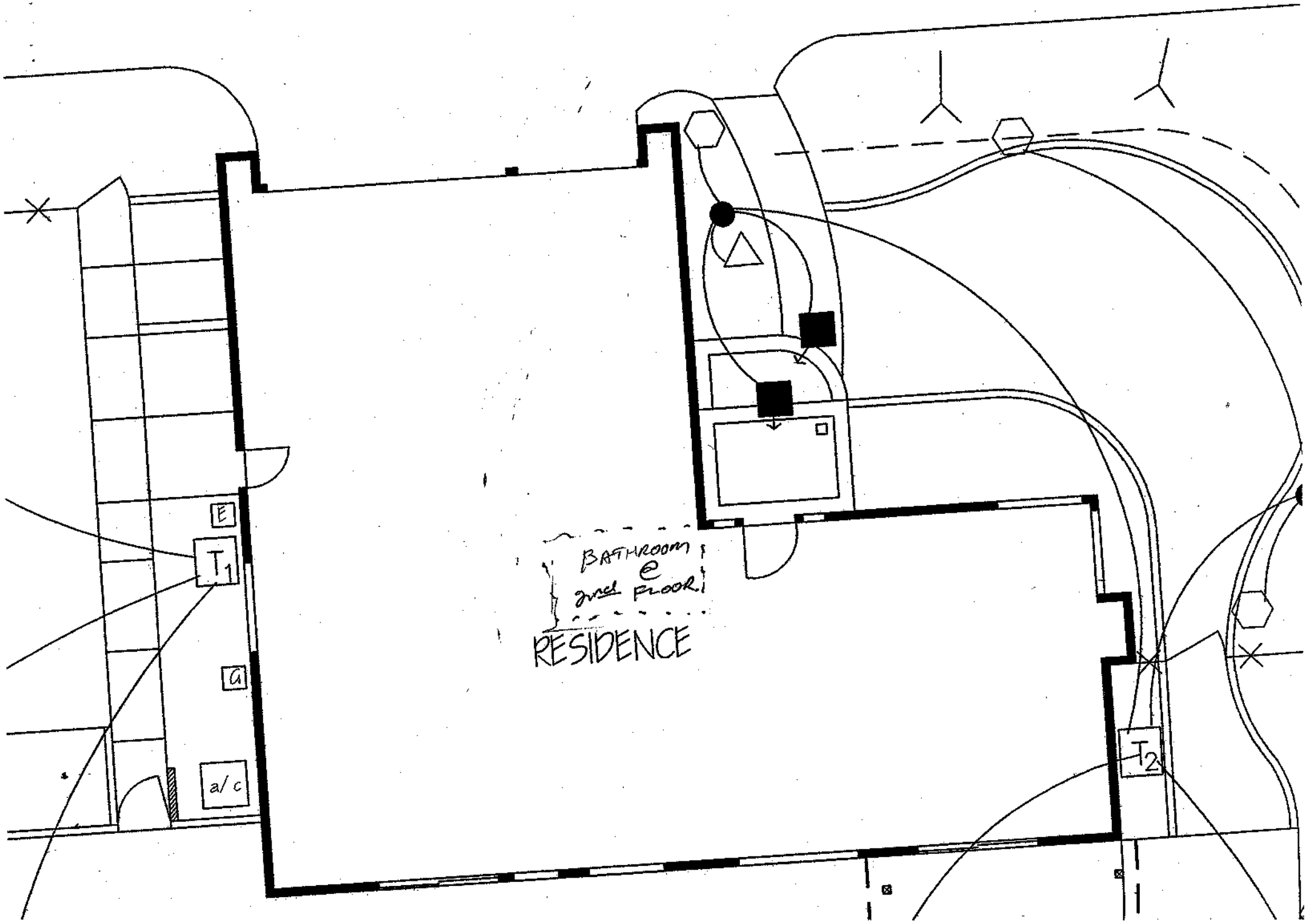
E
T1
G
a/c
BATHROOM
@
2nd FLOOR
RESIDENCE
T2