COUNTY OF LOS ANGELES
DEPARTMENT OF PUBLIC WORKS
BUILDING AND SAFETY / LAND DEVELOPMENT

LA PUENTE (UNIC) # 0200
16005 CENTRAL AVENUE
LA PUENTE CA 91744
PHONE: (626) 961-9611 EXT:

BUILDING PERMIT
ALTERATION/REPAIR
BL 0200 1101190003

LEGAL ID:
TR: 27320 LT: 29

ASSESSOR INFORMATION NUMBER:
8207-010-011

TENANT:

OWNER: TEL. NO:
CHEN, CHIH H -
1811
HACIENDA HEIGHTS CA

APPLICANT: TEL. NO:
SAME AS CONTRACTOR -

CONTRACTOR: TEL. NO:
SUNSHINE ROOFING INC. (626) 581-7688-
516 N DIAMOND BAR BLVD #183 LIC. NO
DIAMOND BAR, CA 91765 755126 C39

ARCHITECT OR ENGINEER: TEL. NO:
-
LIC. NO:

MAP NO: SEWER MAP BOOK: PAGE: FIRE ZONE: CMP:
X 3 00

NO. OF FAMILIES: DWELLING UNITS: APT/COND: STAT CLASS:
NO 21

AIR QUALITY:	SCHOOL WITHIN 1000 FEET	HAZARDOUS MATERIALS
NO	NO	NO

STRUCTURE:	SQ. FT	NO. OF STORIES	CONST TYPE
	2700		V-B

EXIST BLDG USE: SFD USE ZONE: R1
EXIST OCC GRP:

BLDGS. NOW ON LOT: VALUATION: 8,300

FEES PAID

FEE DESCRIPTION:	QUANTITY:	UOM:	AMOUNT:
AA BLDG PERMIT ISSUANCE			26.60
AB STATE GREEN BLDG FEE	8300.00	VAL	1.00
AC STRONG MOTION RESID	8300.00	VAL	0.80
AX BUILDING REVIEW FEE			78.60
D2 PERMIT W/O EN-HC	8300.00	VAL	192.30
	TOTAL FEES		299.30

REPORT ID: DPR261 ROUTE TO: BS0200

BUILDING ADDRESS:
1811 RADA RD
LCNT CA
NEAREST CROSS STREET:
THOMAS PAGE: 678 GRID: E4 LOCALITY: HACIENDA HEIGH

ISSUED ON: PROCESSED BY:
01/19/11 GD

FINAL DATE FINAL BY: CODE:

DESCRIPTION OF WORK
T/O AND RE-ROOF PATIO REINFORCE EXST FRAMING

SPECIAL CONDITIONS:

APPROVALS	DATE	INSPECTOR SIGNATURE
LOCATION AND SETBACKS		
SOILS ENGINEER APPROVAL		
FOUNDATION/TRENCH FORMS		
SLAB/UNDER FLOOR		
RAISED FLOOR FRAMING		
UNDERFLOOR INSULATION		
FLOOR SHEATHING		
ROOF SHEATHING	1-20-11	[illegible]
SHEAR PANELS		
FRAME INSPECTION		
FIRE SPRINKLER HANGERS		
INSULATION/WEATHER STRIP		
INTERIOR LATH/DRYWALL		
EXTERIOR LATH		
RATED FLOOR/CEIL ASSEM.		
RATED WALL ASSEMBLIES		
RATED SHAFTS/OPENINGS		
T-BAR CEILINGS		
LOT DRAINAGE		

OWNER-BUILDER DECLARATION

I hereby affirm under penalty of perjury that I am exempt from the Contractors' State License Law for the reason(s) indicated below by the checkmark(s) I have placed next to the applicable item(s) (Section 7031.5, Business and Professions Code): Any city or county that requires a permit to construct, alter, improve, demolish, or repair any structure, prior to its issuance, also requires the applicant for the permit to file a signed statement that he or she is licensed pursuant to the provisions of the Contractors' State License Law (Chapter 9 (commencing with Section 7000) of Division 3 of the Business and Professions Code) or that he or she is exempt from licensure and the basis for the alleged exemption. Any violation of Section 7031.5 by any applicant for a permit subjects the applicant to a civil penalty of not more than five hundred dollars ($500).):

(_) I, as owner of the property, or my employees with wages as their sole compensation, will do (✓) all of or (_) portions of the work, and the structure is not intended or offered for sale (Section 7044, Business and Professions Code: The Contractors' State License Law does not apply to an owner of property who, through employees' or personal effort, builds or improves the property, provided that the improvements are not intended or offered for sale. If, however, the building or improvement is sold within one year of completion, the Owner-Builder will have the burden of proving that it was not built or improved for the purpose of sale.).

(_) I, as owner of the property, am exclusively contracting with licensed Contractors to construct the project (Section 7044, Business and Professions Code: The Contractors' State License Law does not apply to an owner of property who builds or improves thereon, and who contracts for the projects with a licensed Contractor pursuant to the Contractors' State License Law).

(_) I am exempt from licensure under the Contractors' State License Law for the following reason:

_____

By my signature below I acknowledge that, except for my personal residence in which I must have resided for at least one year prior to completion of the improvements covered by this permit, I cannot legally sell a structure that I have built as an owner-builder if it has not been constructed in its entirety by licensed contractors. I understand that a copy of the applicable law, Section 7044 of the Business and Professions Code, is available upon request when this application is submitted or at the following Web site: http://www.leginfo.ca.gov/calaw.html.

Date: _____

Signature of Property Owner or Authorized Agent

_____

LICENSED CONTRACTOR'S DECLARATION

I hereby affirm under penalty of perjury that I am licensed under provisions of Chapter 9 (commencing with Section 7000) of Division 3 of the Business and Professions Code, and my license is in full force and effect.

License Class C39 License No. 755126

Date 1/19/11 Contractor Signature [signature]

WORKERS' COMPENSATION DECLARATION

WARNING: FAILURE TO SECURE WORKERS' COMPENSATION COVERAGE IS UNLAWFUL, AND SHALL SUBJECT AN EMPLOYER TO CRIMINAL PENALTIES AND CIVIL FINES UP TO ONE HUNDRED THOUSAND DOLLARS ($100,000), IN ADDITION TO THE COST OF COMPENSATION, DAMAGES AS PROVIDED FOR IN SECTION 3706 OF THE LABOR CODE, INTEREST, AND ATTORNEY'S FEES.

I hereby affirm under penalty of perjury one of the following declarations:

____I have and will maintain a certificate of consent to self-insure for workers' compensation, issued by the Director of Industrial Relations as provided for by Section 3700 of the Labor Code, for the performance of the work for which this permit is issued.

Policy No. _____

____ I have and will maintain workers' compensation insurance, as required by Section 3700 of the Labor Code, for the performance of the work for which this permit is issued. My workers' compensation insurance carrier and policy number are:

State Fund _____ _____

Carrier Policy Number Expiration Date

_____ _____

Name of Agent Phone Number

___ I certify that, in the performance of the work for which this permit is issued, I shall not employ any person in any manner so as to become subject to the workers' compensation laws of California, and agree that, if I should become subject to the workers' compensation provisions of Section 3700 of the Labor Code, I shall forthwith comply with those provisions

[signature] 1/19/11

Signature of Applicant Date

LOBBYIST ORDINANCE CERTIFICATION
Complete this section for permits in Unincorporated Los Angeles County only

This is to certify that I, as permit applicant, am familiar with the requirements of Los Angeles County Code Chapter 2.160 et seq., (relating to the Los Angeles County Lobbyist Ordinance) and that all persons acting on behalf of myself complied and will continue to comply therewith through the application process.

_____ _____

Applicant (Print Name) Applicant Signature

_____ _____

Company Name Date

JOB ADDRESS	
LOCALITY	

HAZARDOUS MATERIAL DECLARATION

Will the applicant or future building occupant handle a hazardous material or a mixture containing a hazardous material equal to or greater than the amount specified on the hazardous materials information guide?

Yes ☐ No ☐

Will the intended use of the building by the applicant or future building occupant require a permit for construction or modification from the South Coast Air Quality Management District (SCAQMD)? See permitting checklist for guidelines.

Yes ☐ No ☐

I have read the hazardous materials information guide and the SCAQMD permitting checklist, I understand my requirements under the Los Angeles County Code Title 2, Chapter 220 Sections 220.100 through 220.140 concerning hazardous material reporting and for obtaining a permit from the SCAQMD.

ASBESTOS NOTIFICATION

☐ Notification letter sent to AQMD and/or EPA

☐ I declare that notification of asbestos removal is not applicable to addressed project.

DECLARATION REGARDING CONSTRUCTION LENDING AGENCY

I hereby affirm under penalty of perjury that there is a Construction lending agency for the performance of the work for which this permit is issued (Section 3097, Civil Code).

Lender's Name

_____

Lender's Address

_____

By my signature below, I certify to each of the following:
I am the property owner or authorized to act on the property owner's behalf.
I have read this application and the information I have provided is correct.
I agree to comply with all applicable city and county ordinances and state laws relating to building construction.
I authorize representatives of this county to enter the above-identified property for inspection purposes.

Signature of Property Owner or Authorized Agent

[signature]

Date 1/19/11

Prescriptive Certificate of Compliance: Residential Reroof

CF-1R-ALT-ReRoof

Project Address:	Climate Zone	Permit #
1811 Rada Rd, Hacienda HTS	9	BU1011000015

ROOFING PRODUCTS (COOL ROOFS) §151(f)12

When the area of exterior roof surface to be replaced exceeds 50% of the existing roof area, or 1,000 ft², whichever is less, the new roofing area must meet the roofing product "Cool Roof" requirements of §152(b)1Hi, 152(b)1Hii, or 152(b)1Hiii.

Check applicable **alternative** or **exception** below if the roof alteration is exempt from the roofing product "Cool Roof" requirements:

- ☐ Cool roofs not required in Climates Zones 1-12, 14, and 16 with a low sloped roof pitch (less or 2:12 pitch).
- ☐ Cool roofs not required in Climates Zones 1-9, and 16 with a steep-sloped roofs (greater pitch than 2:12) and product weight less than 5/lb/ft².

Alternatives to §152(b)1Hi and §152(b)Hii, Steep-slope roof *(pitch > 2:12)*

- ☐ Insulation with a thermal resistance of at least 0.85 hr·ft²·°F/Btu or at least a 3/4 inch air-space is added to the roof deck over an attic; or
- ☐ Existing ducts in the attic are insulated and sealed according to §151(f)10; or
- ☐ In climate zones 10, 12 and 13, with 1 ft2 of free ventilation area of attic ventilation for every 150 ft2 of attic floor area, and where at least 30 percent of the free ventilation area is within 2 feet vertical distance of the roof ridge; or
- ☐ Building has at least R-30 ceiling insulation; or
- ☐ Building has radiant barrier in the attic meeting the requirements of §151(f)2; or
- ☐ Building has no ducts in the attic; or
- ☐ In climate zones 10, 11, 13 and 14, R-3 or greater roof deck insulation above vented attic.

Exception to §152(b)1Hiii, Low-slope roof *(pitch ≤2:12)*

- ☐ Building has no ducts in the attic.

Other Exceptions

- ☐ Roofing area is covered by building integrated; photovoltaic panels and solar thermal panels are exempt from the Cool Roof criteria.
- ☐ Roof constructions that have thermal mass over the roof membrane with at least 25 lb/ft2 are exempt from the Cool Roof criteria.

NOTE: If any one of the alternatives or exception is checked the Aged Solar Reflectance and Thermal Emittance requirements for roofing products in §118(i) are not applicable. Do not fill table below.

CRRC Product ID Number[1]	Roof Slope ≤ 2:12	Roof Slope > 2:12	Product Weight < 5lb/ft²	Product Weight ≥ 5lb/ft²	Product Type[2]	Aged Solar Reflectance[3,4]		Thermal Emittance	SRI[5]
0942 - 0023	☐	☑	☐	☑	Villa-600	☐[4]	0.23	0.91	23
	☐	☐	☐	☐		☐[4]			

Note: If no CRRC-1 label is available, this compliance method cannot be used, use the Performance Approach to show compliance,

1. *The CRRC Product ID Number can be obtained from the Cool Roof Rating Council's Rated Product Directory at www.coolroofs.org/products/search.php*
2. *Indicate the type of product is being used for the roof top, i.e. single-ply roof, asphalt roof, metal roof, etc.*
3. *If the Aged Reflectance is not available in the Cool Roof Rating Council's Rated Product Directory then use the Initial Reflectance value from the same directory and use the equation $(0.2+0.7(\rho_{initial} - 0.2)$ to obtain a calculated aged value. Where ρ is the Initial Solar Reflectance.*
4. *Check box if the Aged Reflectance is a calculated value using the equation above.*
5. *Calculate the SRI value by using the SRI- Worksheet at http://www.energy.ca.gov/title24/ and enter the resulting value in the SRI Column above and attach a copy of the SRI- Worksheet to the CF-1R.*

To apply **Liquid Field Applied Coatings,** the coating must be applied across the entire roof surface and meet the dry mil thickness or coverage recommended by the coatings manufacturer and meet minimum performance requirements listed in §118(i)4. Select the applicable coating:

☑ Aluminum-Pigmented Asphalt Roof Coating ☐ Cement-Based Roof Coating ☐ Other _____

*NOTE: When a Cool Roof is required, the installing contractor shall complete and submit the **CF-6R-ENV-01** for final inspection.*

Declaration Statement

- I certify under penalty of perjury, under the laws of the State of California, the information provided on this form is accurate and complete.
- I certify that the energy features and performance specifications identified on this Certificate of Compliance conform to the requirements of Title 24, Parts 1 and 6 of the California Code of Regulations.

Name:	Maggie	Signature:	Maggie
Company:	Sunshine Roofing	Date:	1/10/11
Address:	516 N. Diamond Bar BLVD, #183	License:	755126
City/State/Zip:	Diamond Bar, CA 91765	Phone:	909-598-8988

For assistance or questions regarding the Energy Standards, contact the Energy Hotline at: 1-800-772-3300.

The E & C Company, Inc.

1811 RADA RD
HACIENDA HEIGHTS, CA

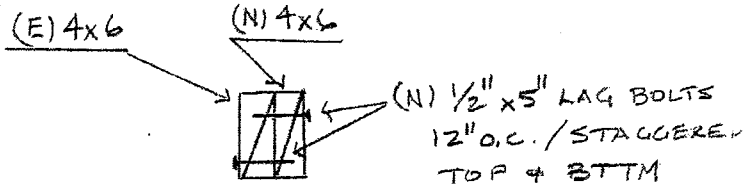

HEADER DETAIL

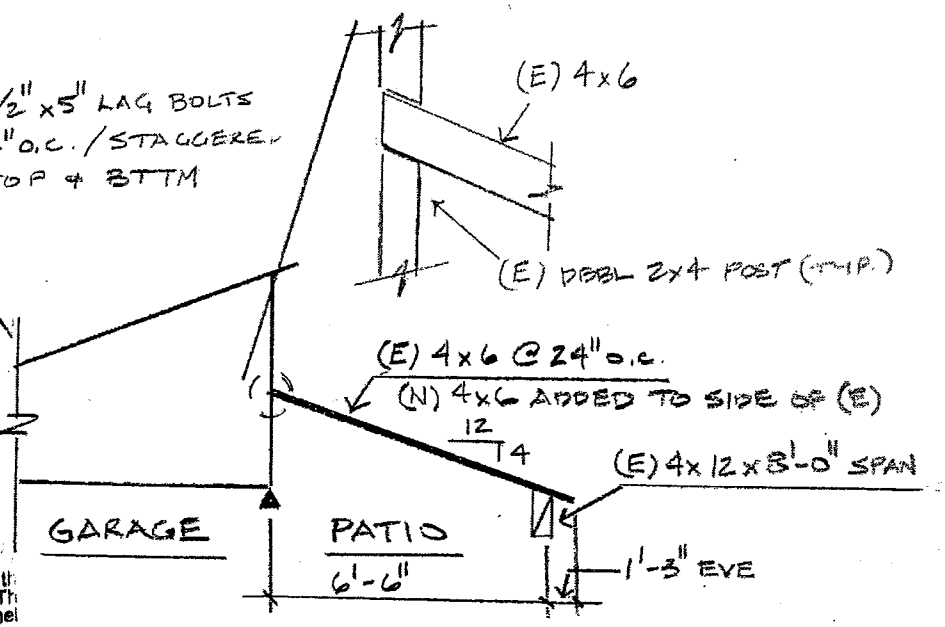

BUILDING AND SAFETY DIVISION
Department of Public Works
APPROVED
UNDER TITLE 26
BY: _____
JAN 19 2011

This set of plans ... kept on the ... at all times and it is unlawful to make any Changes ... alterations on same without written permission from the Building and Safety Division, County of Los Angeles. The stamping of this plan and specification SHALL NOT be held to permit or to be an approval of the violation of any provisions of any County ...

ROOF SECTION

— COVER FRONT PORCH W/ DECKING & ROOFING (MONIER = 6.0 PSF)

ROOF LOADS:

D.L. =	(N) RF'G	= 6.0 PSF
	(N) PLY	= 1.5 "
	(N) 1x6	= 1.3 "
	(E) FRAM'G	= 4.7 "
		13.5
	C.F. =	x 1.054
		14.2
	MISC. =	.8
		15.0
L.L. =		20.0
T.L. =		35.0 PSF

— O.K. BY INSPECTION; INSTALL (N) TILE ROOFING

1336 Moorpark Road, #327, Thousand Oaks, California 91360 (805) 578-1096 fax (805) 578-9296