17802 PAQUITA DR.

COUNTY OF LOS ANGELES
DEPARTMENT OF PUBLIC WORKS
BUILDING AND SAFETY / LAND DEVELOPMENT

LA PUENTE # 0200
16005 CENTRAL AVENUE
LA PUENTE CA 91744
PHONE: (626) 961-9611 EXT:

BUILDING PERMIT
ALTERATION/REPAIR
BL 0200 0311120038

LEGAL ID:
TR: 27920 LT: 43

ASSESSOR INFORMATION NUMBER:
8265-015-001

TENANT:

OWNER: TEL. NO:
KALLER GERALD E;SANDRA S (626) 964-5132-
17802 PAQUITA DR
ROWH 917484342

APPLICANT: TEL. NO:
SAME AS OWNER -

CONTRACTOR: TEL. NO:
SAME AS OWNER -
LIC. NO

ARCHITECT OR ENGINEER: TEL. NO:
-
LIC. NO:

MAP NO: SEWER MAP BOOK: PAGE: FIRE ZONE: CMP:
XX X 01

NO. OF FAMILIES: DWELLING UNITS: APT/COND: STAT CLASS:
NO 21

AIR QUALITY: SCHOOL WITHIN 1000 FEET: HAZARDOUS MATERIALS:
NO NO NO

REQUIRED SET BACK YARD: HWY: TOTAL SETBACK FROM PROP LINE: EXIST WIDTH:
FRONT PL-
SIDE PL-

	SQ. FT	NO. OF STORIES	CONST TYPE
STRUCTURE:			VN

EXIST BLDG USE: RESID USE ZONE: XX
EXIST OCC GRP:

BLDGS. NOW ON LOT: VALUATION: 13,000

FEES PAID

FEE DESCRIPTION:	QUANTITY:	UOM:	AMOUNT:
AA BLDG PERMIT ISSUANCE			22.00
AC STRONG MOTION RESID	13000.00	VAL	1.30
D1 PLANCHECK W/O EN-HC	13000.00	VAL	180.45
D2 PERMIT W/O EN-HC	13000.00	VAL	212.50
	TOTAL FEES		416.25

REPORT ID: DPR261 ROUTE TO: BS0200

BUILDING ADDRESS:
17802 PAQUITA DR
ROWH CA 917484342
NEAREST CROSS STREET: MATADOR
THOMAS PAGE: 678 GRID: H6 LOCALITY: ROWLAND HEIGHT

ISSUED ON: 11/14/03 PROCESSED BY: DY EXPIRES ON: 11/08/04

FINAL DATE: 12-24-03 FINAL BY: CODE:

DESCRIPTION OF WORK
T/O ROOF, INSTALL OSB, RE-ROOF CONCRETE TILE MONIER 10.3LB/SF ICBO#ER2093

SPECIAL CONDITIONS:

APPROVALS	DATE	INSPECTOR SIGNATURE
LOCATION AND SETBACKS		
SOILS ENGINEER APPROVAL		
FOUNDATION/TRENCH FORMS		
SLAB/UNDER FLOOR		
RAISED FLOOR FRAMING		
UNDERFLOOR INSULATION		
FLOOR SHEATHING		
ROOF SHEATHING	11-26-03	
SHEAR PANELS		
FRAME INSPECTION		
FIRE SPRINKLER HANGERS		
INSULATION/WEATHER STRIP		
INTERIOR LATH/DRYWALL		
EXTERIOR LATH		
RATED FLOOR/CEIL ASSEM.		
RATED WALL ASSEMBLIES		
RATED SHAFTS/OPENINGS		
T-BAR CEILINGS		
LOT DRAINAGE		

LICENSED CONTRACTOR'S DECLARATION

I hereby affirm under penalty of perjury that I am licensed under provisions of Chapter 9 (commencing with Section 7000) of Division 3 of the Business and Professions Code, and my license is in full force and effect.

License Class _____ Lic. No. _____

Contractor's Signature _____ Date _____

OWNER-BUILDER DECLARATION

I hereby affirm under penalty of perjury that I am exempt from the Contractors License Law for the following reason (Sec. 7031.5, Business and Professions Code: Any city or county which requires a permit to construct, alter, improve, demolish, or repair any structure, prior to its issuance, also requires the applicant for such permit to file a signed statement that he or she is licensed pursuant to the provisions of the Contractors License Law (Chapter 9 (commencing with Section 7000) of Division 3 of the Business and Professions Code) or that he or she is exempt therefrom and the basis for the alleged exemption. Any violation of Section 7031.5 by any applicant for a permit subjects the applicant to a civil penalty of not more than five hundred dollars ($500).):

☐ I am exempt under Sec. _____ , B.& P.C. for this reason:

_____

_____

[Electrical, Plumbing & Sewer Permits Only]

☐ I, as owner of the property, will do the work, and the structure is not intended or offered for sale (Sec. 7044, Business and Professions Code: The Contractors License Law does not apply to an owner of property who builds or improves thereon, and who does such work himself or herself, provided that such improvements are not intended or offered for sale. If, however, the building or improvement is sold within one year of completion, the owner-builder will have the burden of proving that he or she did not build or improve for the purpose of sale.).

[All Other Permits]

☒ I, as owner of the property, or my employees with wages as their sole compensation, will do the work, and the structure is not intended or offered for sale (Sec. 7044, Business and Professions Code: The Contractors License Law does not apply to an owner of property who builds or improves thereon, and who does such work himself or herself or through his or her own employees, provided that such improvements are not intended or offered for sale. If, however, the building or improvement is sold within one year of completion, the owner-builder will have the burden of proving that he or she did not build or improve for the purpose of sale.).

☐ I, as owner of the property, am exclusively contracting with licensed contractors to construct the project (Sec. 7044, Business and Professions Code: The Contractors License Law does not apply to an owner of property who builds or improves thereon, and who contracts for such projects with a contractor(s) licensed pursuant to the Contractors License Law.).

Owner Signature _____ Date 11/14/03

WORKER'S COMPENSATION DECLARATION

I hereby affirm under penalty of perjury one of the following declarations:

☐ I have and will maintain a certificate of consent to self-insure for worker's compensation, as provided for by Section 3700 of the Labor Code, for the performance of the work for which this permit is issued.

☐ I have and will maintain worker's compensation insurance, as required by Section 3700 of the Labor Code, for the performance of the work for which this permit is issued. My worker's compensation insurance carrier and policy number are:

Carrier _____

Policy Number _____

☒ I certify that in the performance of the work for which this permit is issued, I shall not employ any person in any manner so as to become subject to the worker's compensation laws of California, and agree that if I should become subject to the worker's compensation provisions of Section 3700 of the Labor Code, I shall forthwith comply with those provisions.

Applicant Signature _____ Date 11/14/03

WARNING: FAILURE TO SECURE WORKER'S COMPENSATION COVERAGE IS UNLAWFUL, AND SHALL SUBJECT AN EMPLOYER TO CRIMINAL PENALTIES AND CIVIL FINES UP TO ONE HUNDRED THOUSAND DOLLARS ($100,000), IN ADDITION TO THE COST OF COMPENSATION, DAMAGES AS PROVIDED FOR IN SECTION 3706 OF THE LABOR CODE, INTEREST, AND ATTORNEY'S FEES.

LOBBYIST ORDINANCE CERTIFICATION

[Complete this section for permits in unincorporated Los Angeles County only]

This is to certify that I, as permit applicant, am familiar with the requirements of Los Angeles County Code Chapter 2.160 et seq., (relating to the Los Angeles County Lobbyist Ordinance) and that all persons acting on behalf of myself complied and will continue to comply therewith through the application process.

Applicant (Print Name) _____ Applicant Signature _____

Company Name (if employed by an entity/agency) _____ Date _____

JOB ADDRESS
LOCALITY

HAZARDOUS MATERIAL DECLARATION

Will the applicant or future building occupant handle a hazardous material or a mixture containing a hazardous material equal to or greater than the amount specified on the hazardous materials information guide?

Yes ☐ No ☐

Will the intended use of the building by the applicant or future building occupant require a permit for construction or modification from the South Coast Air Quality Management District (SCAQMD)? See permitting checklist for guidelines.

Yes ☐ No ☐

I have read the hazardous materials information guide and the SCAQMD permitting checklist, I understand my requirements under the Los Angeles County Code Title 2, Chapter 220 Sections 220.100 through 220.140 concerning hazardous material reporting and for obtaining a permit from the SCAQMD.

ASBESTOS NOTIFICATION

☐ Notification letter sent to SCAQMD or EPA

☐ I declare that notification of asbestos removal is not applicable to addressed project.

CONSTRUCTION LENDING AGENCY

I hereby affirm under penalty of perjury that there is a construction lending agency for the performance of the work for which this permit is issued (Sec. 3097, Civ.C.).

Lender's Name _____

Lender's Address _____

I certify that I have read this application and state under the penalty of perjury that the above information is correct. I agree to comply with all City and County ordinances and State laws relating to building construction, and hereby authorize representatives of this County to enter upon the above-mentioned property for inspection purposes.

Applicant or Agent Signature _____ **Date** 11/14/03

OWNER-BUILDER VERIFICATION

Attention Property Owner:

An **owner-builder** building permit has been applied for in your name and bearing your signature.

Please complete and return this information in the envelope provided at your earliest opportunity to avoid unnecessary delay in processing and issuing your building permit. No building permit will be issued until this verification is received.

1. I personally plan to provide the major labor and materials for construction of the proposed property improvement (yes or no) Yes

2. I (have/havenot) have signed an application for a building permit for the proposed work.

3. I have contracted with the following person (firm) to provide the proposed construction:

Name: No

Address : _____ City _____

Phone: _____ Contractors License No.: _____

4. I plan to provide portions of the work, but I have hired the following person to coordinate, supervise, and provide the major work:

Name: Undecided yet

Address : _____ City _____

Phone: _____ Contractors License No.: _____

5. I will provide some of the work but I have contracted (hired) the following persons to provide the work indicated:

Name: No

Address : _____ City _____

Phone: _____ Type of Work : _____

Signed: [signature]

Property owner: _____

Date: 11/14/03

OWNER-BUILDER INFORMATION

Dear Property Owner:

An application for a building permit has been submitted in your name listing yourself as the builder of the property improvements specified.

For your protection you should be aware that as owner-builder you are the responsible party of record on such a permit. Building permits are not required to be signed by property owners unless they are personally performing their own work. If your work is being performed by someone other than yourself, you may protect yourself from possible liability if that person applies for the proper permit in his or her name.

Contractors are required by law to be licensed and bonded by the State of California and to have a business license from the city or county. They are also required by law to put their license number on all permits for which they apply.

If you plan to do your own work, with the exception of various trades that you plan to subcontract, you should be aware of the following information for your benefit and protection:

If you employ or otherwise engage any persons other than your immediate family, and the work (including materials and other costs) is $200 or more for the entire project, and such persons are not licensed as contractors or subcontractors, then you may be an employer.

If you are an employer, you must register with the state and federal government as an employer and you are subject to several obligations including state and federal income tax withholding, federal social security taxes, workers' compensation insurance, disability insurance costs, and unemployment compensation contributions.

There may be financial risks for you if you do not carry out these obligations, and these risks are especially serious with respect to workers' compensation insurance.

For more specific information about your obligations under federal law, contact the Internal Revenue Service (and, if you wish, the U.S. Small Business Administration) . For more specific information about your obligations under state law, contact the Department of Benefit Payments and the Division of Industrial Accidents.

If the structure is intended for sale, property owners who are not licensed contractors are allowed to perform their work personally or through their own employees, without a licensed contractor or subcontractor, only under limited conditions.

A frequent practice of unlicensed persons professing to be contractors is to secure an "owner-builder' building permit, erroneously implying that the property owner is providing his or her own labor and material personally. Building permits are not required to be signed by property owners unless they are performing their own work personally.

Information about licensed contractors may be obtained by contacting the Contractors' State License Board in your community or at 1020 N Street, Sacramento, California 95814.

Please complete and return the enclosed owner-builder verification form so that we can confirm that you are aware of these matters. The building permit will not be issued until the verification is returned.

KURIC-GRAHAM & ASSOCIATES
28025 Dorothy Dr., # 102
Agoura Hills, Ca 91301
818-879-8282
R2C 605-3

Project: RESIDENCE @ 17802 PAQUITA DR. ROWLAND HTS., CA

Designed By R2 Job No. R2C 605-3
Date 11-6-03 Sheet 1 of 6

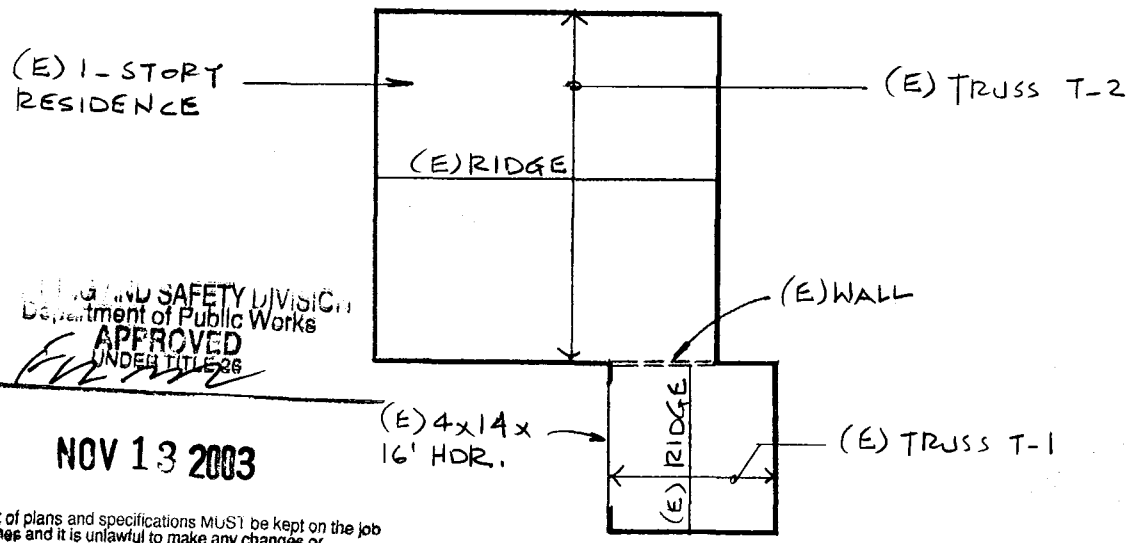

BUILDING AND SAFETY DIVISION
Department of Public Works
APPROVED
UNDER TITLE 26
BY
NOV 13 2003

This set of plans and specifications MUST be kept on the job at all times and it is unlawful to make any changes or alterations on same without written permission from the Division of Building and Safety, County of Los Angeles. The stamping of the plan and specifications SHALL NOT be held to permit or to be an approval of the violation of provisions of any county Ordinance or State Law.

ROOF PLAN

3/05

BUILDING CODE : "UBC 1997/CBC 2001"

ROOF LOADS :

Sh. 1 ~ 6

				VAULTED
DL :	TILE		10	10
	FRM'G + (E) SHT'G		3.5	3.5
	(N) 1/2" PLY		1.5	1.5
	CEIL.		-	3.0
	DL	=	15	18
5:12 PITCH	LL	=	16	16
	TL	=	31 psf	34

RAFTERS : DF #2 OR BETTER.

BEAMS : DF #1 OR BETTER.

KURIC-GRAHAM & ASSOCIATES
28025 Dorothy Dr., # 102
Agoura Hills, Ca 91301
818-879-8282
RZC 605-3

Project: RESIDENCE @ 17802 PAGNITA DR. ROWLAND HTS., CA
Designed By RZ Job No. RZC 605-3
Date 11-6-03 Sheet 2 of 6

1997 UBC, Timber Design Chart: Allowable Moments & Shears

Douglas Fir-Larch: 4x DF#1 Fv = 95 psi Fb = as noted E = 1.7E6 psi

Douglas Fir-Larch: 6x,8x DF#1 Fv = 85 psi Fb = 1350 u.n.o. E = 1.6E6 psi

		Cd = 1.25		Cd = 1.0		
		Vall.(#)	Mall.(#')	Vall.(#)	Mall.(#')	I(in4)
4x4	Fb=1500 psi	970	1116	776	893	12.51
4x6	Fb=1300	1524	2390	1219	1912	48.53
4x8	Fb=1300	2009	4152	1607	3322	111.15
4x10	Fb=1200	2562	6239	2050	4991	230.84
4x12	Fb=1100	3118	8460	2494	6768	415.28
4x14	Fb=1000	3671	10668	2937	8534	678.48
4x16	Fb=1000	4225	14131	3380	11305	1034.42
6X6	Fb= 1200 psi	2142	3466	1714	2773	76.26
6X8	Fb=1350	2922	7251	2338	5801	193.36
6X10	Fb=1350	3701	11634	2961	9307	392.96
6X12	Fb=1350	4480	17047	3584	13638	697.07
6X14	Fb=1350	5259	23188	4207	18550	1127.67
6X16	Fb=1350	6039	30101	4831	24081	1706.78
6X18	Fb=1350	6818	37856	5454	30285	2456.38
8x8	Fb=1200 psi	3985	8789	3188	7031	263.67
8x10	Fb=1350	5048	15864	4038	12691	535.86
8x12	Fb=1350	6110	23248	4888	18598	950.55
8x14	Fb=1350	7172	31620	5738	25296	1537.73
8x16	Fb=1350	8235	41048	6588	32838	2327.42
8x18	Fb=1350	9298	51622	7438	41298	3349.61

Notes:

1- Allowable moment capacities for 6x and 8x members deeper than 12" have been reduced by a size factor Cf = (12/d)^1/9

2- **Formulas used:** **Mall.= FbxS**

Vall.= FvxA/1.5

CHECK (E)4x14x16' HDR. : (SEE SH. 1/5)

$l = 16'$, $w_{TL} = \frac{20}{2}(31) + 12_{Bm} = 322$ #/', $+M_{max} = 10{,}304$ #' < 10,668 #' ✓

$R = 2576$ #, $V_d = 2190$ # < 3671 # ✓, $\Delta_{max} = \frac{322 \times .838}{678.5} \times \frac{1.76}{1.7} = .41"\downarrow (= l/466) < l/240$ ✓

(E) 4 x 14 x 16' BM o.k.

KURIC-GRAHAM & ASSOCIATES
28025 Dorothy Dr., # 102
Agoura Hills, Ca 91301
818-879-8282
R2C 605-3

Project: RESIDENCE @ 17802 PAQUITA DR. ROWLAND HTS., CA
Designed By R2 Job No. R2C 605-3
Date 11-6-03 Sheet 3 of 6

TRUSS T-1 : (2x4 MEMBERS @ 24" o.c.) ; DF #1 TOP CHORD : VERIFY

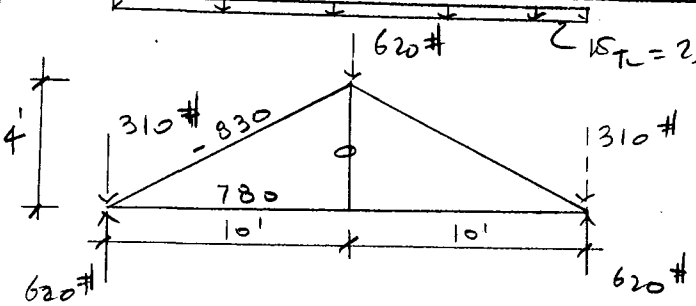

-ve = C = COMPRESSION

+ve = T = TENSION

$\Delta_{max} = .06" \downarrow \left(= \frac{l}{4000}\right)$ ✓

CHECK (E) BOT. CHORD TENSION :

$T_{max} = 780^{\#}$; $f_t = \frac{780}{5.25} = 149$ psi $< \underset{F_t}{575} \times \underset{C_F}{1.5} \times \underset{LDF}{1.25} = 1078$ psi ✓

(E) BOT. CHORD o.k.

PL @ BOT. CHORD SPLICE :

PL CAPACITY $= \frac{1}{4}(3x4)\, 2 \times \underset{\#/\square''}{150} \times \underset{MSP}{1.25} \times \underset{LDF}{1.25} = 1406^{\#} > 780^{\#}$ ✓

(E) CONN. o.k.

CHECK (E) 2x4 TOP CHORD FOR BENDING + COMP. VERIFY (E) 3" x 4" PL MIN.

UBC "94", SEC. 2308.4 "2x4 TOP CHORD" ← USE 96" FOR C_T

$C_T = 1 + \frac{2300\, l_e}{E_{.05}} = 1 + \frac{2300 \times 96}{1.0 \times 10^6} = 1.22$

$l_e = k\, l_u = 1.0 \times 10.77/12 = 129"$

$E_{.05} = .589\, E = .589 \times 1.7 \times 10^6 = 1.0 \times 10^6$ psi

$l_e/d = 129/3.5 = 36.9$

$k = .671\sqrt{\frac{C_T E}{F_c}} = .671\sqrt{\frac{1.22 \times 1.7 \times 10^6}{1450 \times 1.15 \times 1.25}} = 21.2$

$k < l_e/d < 50$ ∴ LONG COL. ; $F'_c = \frac{0.3 E C_T}{(l_e/d)^2} = \frac{0.3 \times 1.7 \times 10^6 \times 1.22}{(36.9)^2} = 457$ psi

$f_{ce1} = \frac{k_{ce} E'}{(l_{e1}/d_1)^2} = \frac{0.3\,(\overset{C_T}{1.22} \times 1.7 \times 10^6)}{(36.9)^2} = 457$ psi $> f_c$ ✓

$f_c = 830/5.25 = 158$ psi , $f_{b_1} = 775 \times 12/3.06 = 3039$ psi ← $M = 62 \times 10^2/8 = 775^{\#'}$

$F'_{b_1} = 1.25\,(1000 \times \underset{C_F}{1.5} \times 1.15) = 2156$ psi

2-2x4 Top CHORD ∴ $\left(\frac{f_c}{F'_c}\right)^2 + \frac{f_{b_1}}{F'_{b_1}\left(1 - \frac{f_c}{f_{ce1}}\right)} = \left(\frac{158/2}{457}\right)^2 + \frac{3039/2}{2156\left(1 - \frac{158/2}{457}\right)} = .03 + .85 = .88 < 1.0$ ✓

(E) TOP CHORD N.G.
ADD (N) 2x4, DF #1 MIN.
TO (E) TOP CHORD & NAIL
W/ 12d @ 12" STAGG.
(ENTIRE TOP CHORD)

SPLICE PL @ ENDS :

PL CAPACITY $= \frac{1}{4}(3x4)\, 2 \times \underset{\#/\square''}{150} \times \underset{MSP}{1.25} \times \underset{LDF}{1.26} = 1406^{\#} > 780^{\#}$ ✓

(E) CONN. o.k.
VERIFY (E) 3" x 4" PL MIN.

KURIC-GRAHAM & ASSOCIATES
28025 Dorothy Dr., # 102
Agoura Hills, Ca 91301
818-879-8282
RZC 605-3

BUILDING AND SAFETY DIVISION
Department of Public Works
APPROVED
NOV 13 2003
BY
Project: 17802 PAQUITA DR. ROWLAND HTS., CA

Designed By RZ Job No. RZC 605-3
Date 11-6-03 Sheet 4 of 6

This set of plans and specifications MUST be kept on the job at all times and it is unlawful to make any changes or alterations on same without written permission from the Division of Building and Safety, County of Los Angeles. The stamping of the plan and specifications SHALL NOT be held to permit or to be an approval of the violation of provisions of any County Ordinance or State Law.

TRUSS T-2 : (2x4 MEMBERS @ 24" o.c.) ; DF #1 ; 6" x 6" PLATES

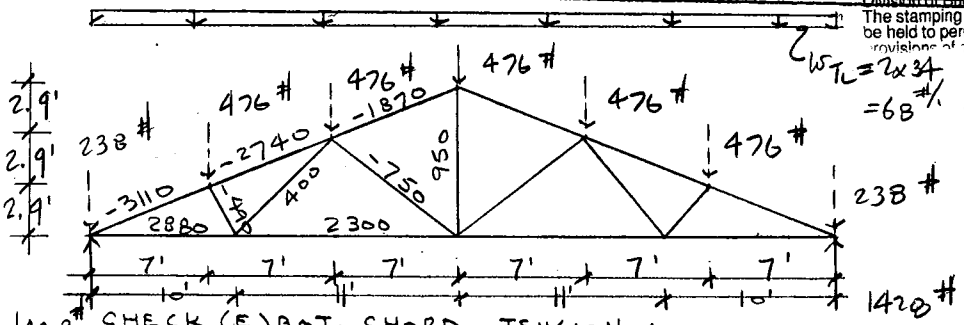

$\Delta_{max} = .42" \downarrow \left(= \frac{L}{1200}\right)$ ✓

CHECK (E) BOT. CHORD TENSION :

$T_{max} = 2880$ # ; $f_t = \frac{2880}{5.25} = 549$ psi $< \underset{F_t}{575} \times \underset{C_F}{1.5} \times \underset{LDF}{1.25} = 1078$ psi ✓

(E) BOT. CHORD o.k.

PL @ BOT. CHORD SPLICE :

PL CAPACITY $= \frac{1}{4}(4 \times 8)\, 2 \times \underset{\#/\square''}{150} \times \underset{MSP}{1.25} \times \underset{LDF}{1.25} = 3750$ # > 2880 # ✓

(E) CONN. o.k.

VERIFY (E) 4" x 8" PL MIN.

CHECK (E) 2x4 TOP CHORD FOR BENDING + COMP.

UBC "94", SEC. 2308.4 "2x4 TOP CHORD"

$C_T = 1 + \frac{2300\, l_e}{E_{.05}} = 1 + \frac{2300 \times 91}{1.0 \times 10^6} = 1.21$ $\qquad l_e = k\, l_u = 1.0 \times 7.6 \times 12 = 91"$

$E_{.05} = .589\, E = .589 \times 1.7 \times 10^6 = 1.0 \times 10^6$ psi

$l_e/d = 91/3.5 = 26.0$

$k = .671 \sqrt{\frac{C_T E}{F_c}} = .671 \sqrt{\frac{1.21 \times 1.7 \times 10^6}{1450 \times 1.15 \times 1.25}} = 21.1$

$k < l_e/d < 50$ ∴ LONG COL. ; $F'_c = \frac{0.3 E C_T}{(l_e/d)^2} = \frac{0.3 \times 1.7 \times 10^6 \times 1.21}{(26)^2} = 913$ psi

$f_{cE1} = \frac{K_{cE} E'}{(l_{e_1}/d_1)^2} = \frac{0.3\,(\overset{C_T}{1.21} \times 1.7 \times 10^6)}{(26)^2} = 913$ psi $> f_c$ ✓

$f_c = 3110/5.25 = 592$ psi , $f_{b_1} = 416 \times 12/3.06 = 1633$ psi ← $M = 68 \times 7^2/8 = 416$ #

$F'_{b_1} = 1.25\,(1000 \times \underset{C_F}{1.5} \times 1.15) = 2156$ psi

2-2x4 Top CHORD ∴ $\left(\frac{f_c}{F'_c}\right)^2 + \frac{f_{b_1}}{F'_{b_1}\left(1 - \frac{f_c}{f_{cE1}}\right)} = \left(\frac{592/2}{913}\right)^2 + \frac{1633/2}{2156\left(1 - \frac{592/2}{913}\right)} = .11 + .56 = .67 < 1.0$ ✓

(E) TOP CHORD N.G.

ADD (N) 2x4, DF #1 MIN. TO (E) 2x4 TOP CHORD & NAIL w/ 1nd @ 12" STAGG. (ENTIRE TOP CHORD)

SPLICE PL @ ENDS :

PL CAPACITY $= \frac{1}{4}(4 \times 8)\, 2 \times \underset{\#/\square''}{150} \times \underset{MSP}{1.25} \times \underset{LDF}{1.26} = 3750$ # > 2880 # ✓

(E) CONN. o.k.

VERIFY (E) 4" x 8" PL MIN.

KURIC-GRAHAM & ASSOCIATES
28025 Dorothy Dr., # 102
Agoura Hills, Ca 91301
818-879-8282
RZC 605_3

Project: RESIDENCE @ 17802 PAGUITA DR. ROWLAND HTS., CA
Designed By RZ Job No. RZC 605-3
Date 11-6-03 Sheet 5 of 6

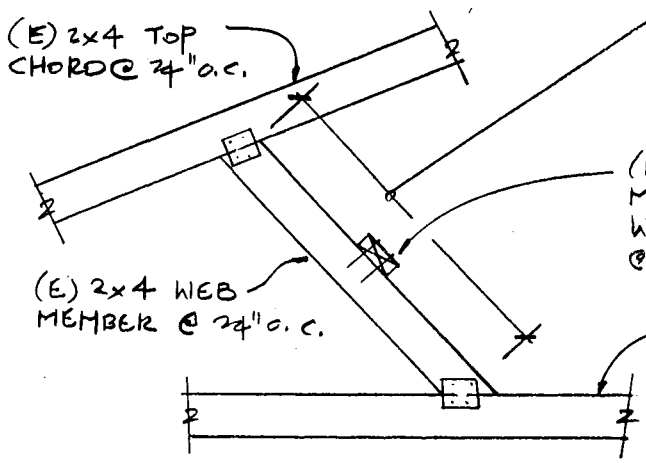

NOTE:
THIS DETAIL APPLIES TO (E)/(N) WEB MEMBERS LONGER THAN 6'.

(N) 2x4 FLAT CONTINUOUS MEMBER, NAIL TO (E) WEB MEMBER W/ 2-16d NAILS @ MIDLENGTH OF MEMBER

(E) 2x4 BOTTOM CHORD @ 24" o.c.

SAFETY DIVISION
Department of Public Works
APPROVED
BY
NOV 13 2003
This set of plans and specifications MUST be kept on the job at all times and it is unlawful to make any changes or alterations on same without written permission from the Division of Building and Safety, County of Los Angeles. The stamping of the plan and specifications SHALL NOT be held to permit or to be an approval of the violation of provisions of any county Ordinance or State Law.

TYP. WEB MEMBER REINFORCEMENT

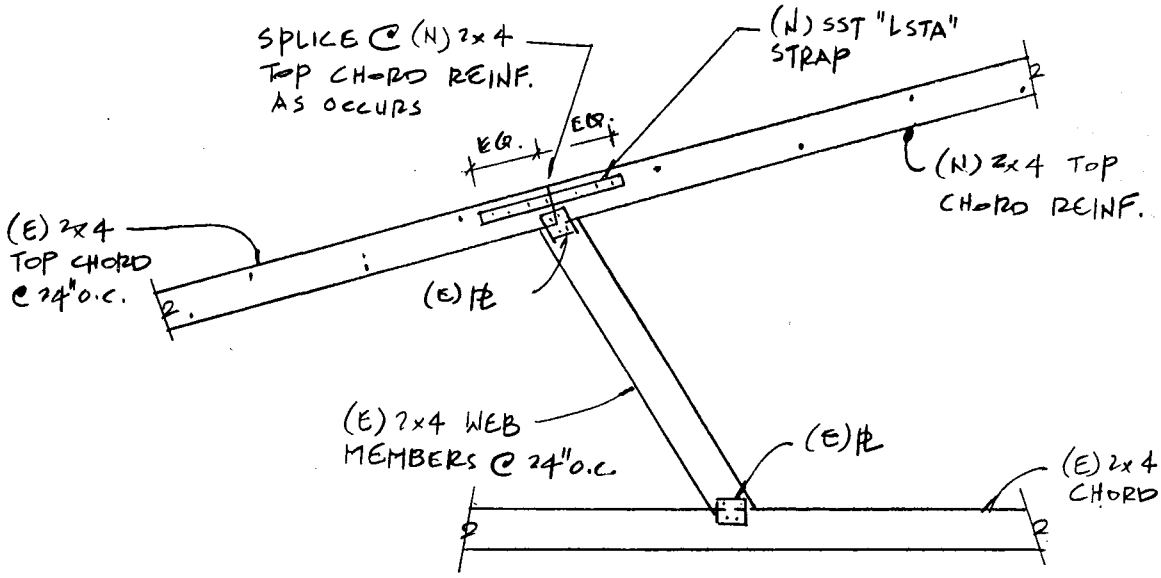

3/05

TYP. TOP CHORD REINFORCEMENT & STRAP

KURIC-GRAHAM & ASSOCIATES
28025 Dorothy Dr., # 102
Agoura Hills, Ca 91301
818-879-8282
RZC 605-3

Project: RESIDENCE @ 17802 PAQUITA DR. ROWLAND HTS, CA
Designed By RZ Job No. RZC 605-3
Date 11-6-03 Sheet 6 of 6

INSTRUCTIONS TO ROOFER/FRAMER

(E) TRUSS T-1

- VERIFY (E) 3" X 4" PLATE MIN. AT ANY BOTTOM CHORD SPLICES.
- VERIFY (E) 3" X 4" PLATE MIN. AT CONNECTION OF TOP CHORD TO THE BOTTOM CHORD AT BOTH ENDS OF THE TRUSS.
- ADD (N) 2 x 4, DF # 1 MIN. TO (E) 2 x 4 TOP CHORD & NAIL W/ 12d @ 12" O.C. STAGG.(ENTIRE TOP CHORD;SEE SH. 1/6 & 3/6 FOR LOCATION)

(E) TRUSS T-2

- VERIFY (E) 4" X 8" PLATE MIN. AT ANY BOTTOM CHORD SPLICES.
- VERIFY (E) 4" X 8" PLATE MIN. AT CONNECTION OF TOP CHORD TO THE BOTTOM CHORD AT BOTH ENDS OF THE TRUSS.
- ADD (N) 2 x 4, DF # 1 MIN. TO (E) 2 x 4 TOP CHORD & NAIL W/ 12d @ 12" O.C. STAGG.(ENTIRE TOP CHORD;SEE SH. 1/6 & 4/6 FOR LOCATION)

GENERAL TRUSS NOTES:
(AS APPLICABLE)

- VERIFY DF #1 GRADE OF LUMBER AT (E) TOP CHORDS. (VERIFY STAMP)
- TOP CHORD SPLICES ARE ALLOWED AT PANEL POINTS ONLY. ADD SIMPSON "LSTA12" STRAP AT THE SPLICE W/ FULL 10d NAILING. **(SEE SH. 5/6)**
- **ALL WEB MEMBERS:** FOR MEMBER LENGTHS EXCEEDING 6', ADD (N) 2 X 4 FLAT CONTINUOUS MEMBER AND NAIL TO EXISTING WEB MEMBER W/ 2 - 12d NAILS AT MID LENGTH OF MEMBER PERPENDICULAR TO DIRECTION OF SPAN OF THE TRUSS.**(SEE SH. 5/6)**
- **FIELD VERIFY 5:12 ROOF SLOPE TYP.**
- **CONTRACTOR SHALL VERIFY ALL EXISTING DIMENSIONS, MEMBER SIZES AND SITE CONDITIONS PRIOR TO STARTING NEW WORK.**

BUILDING AND SAFETY DIVISION
Department of Public Works
APPROVED
UNDER TITLE 26
BY

NOV 13 2003

This set of plans and specifications MUST be kept on the job at all times and it is unlawful to make any changes or alterations on same without written permission from the Division of Building and Safety, County of Los Angeles. The stamping of the plan and specifications SHALL NOT be held to permit or to be an approval of the violation of provisions of any County Ordinance or State Law.