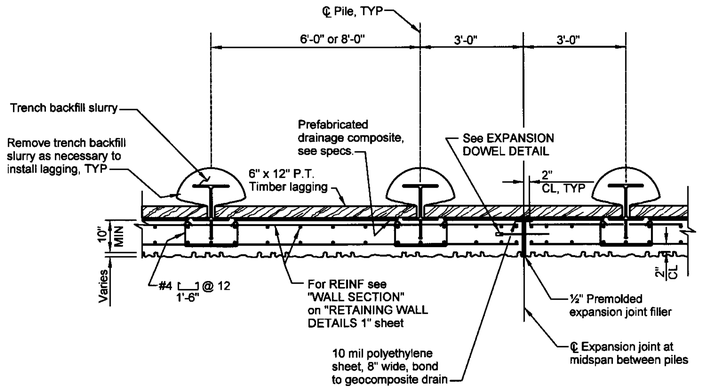

SECTION D-D
NOT TO SCALE

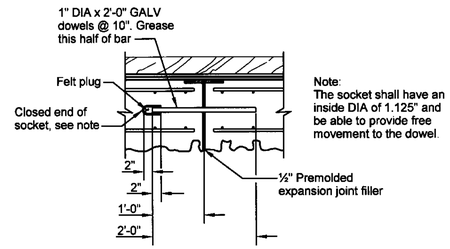

EXPANSION DOWEL DETAIL
NOT TO SCALE

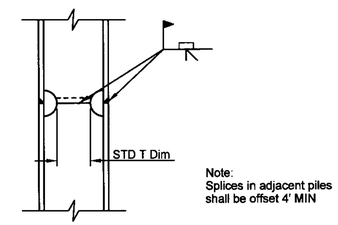

PILE SPLICE DETAIL
1" = 1'-0"

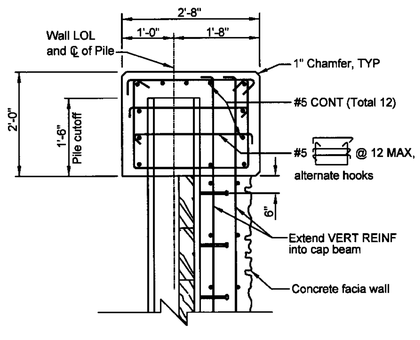

DETAIL A
¾"= 1'-0"

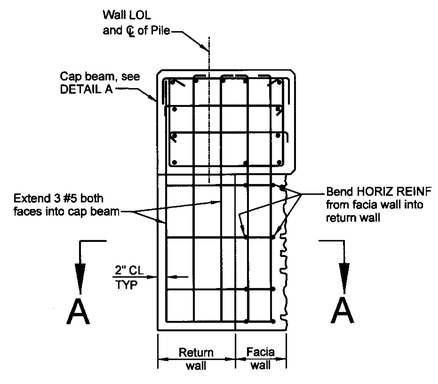

DETAIL B
¾"= 1'-0"

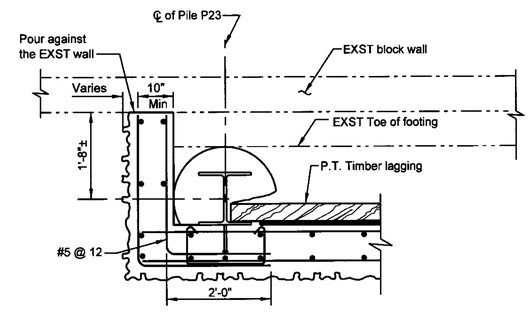

SECTION A-A
¾"= 1'-0"

AS BUILT

Date: 5/17/12 Corrections by: T.M.

Resident Engineer: Jon Zaragoza

NO CHANGES

PB641955

THE CONTRACTOR SHALL VERIFY ALL CONTROLLING FIELD DIMENSIONS BEFORE ORDERING OR FABRICATING ANY MATERIAL.

DATE	MK	DESCRIPTION

REVISIONS

REGISTERED PROFESSIONAL ENGINEER TAREK MOHAMED NO. C74171 CIVIL STATE OF CALIFORNIA

T Mohamed 6/1/11
PROJECT ENGINEER DATE

COUNTY OF LOS ANGELES DEPARTMENT OF PUBLIC WORKS

EDGERIDGE DRIVE

100 FEET SOUTH OF DRAIN NO. 6

PROJECT ID NO. RDC0015634

RETAINING WALL DETAILS 2

BR. NO. 4090	PCA X240000054	DWG PB641955	SHEET 6 OF 8

DRAFTER T. MOHAMED | DESIGNER T. MOHAMED | CHECKER B. FATHOLLAHI | CADD PROJECT FILE NAME RDC0015634-WALL.DGN | REVIEWED BY Balvin Fathollahi DATE 6/1/11

DATE: $DATE$TIME FILE: $TIME$ $FILE$