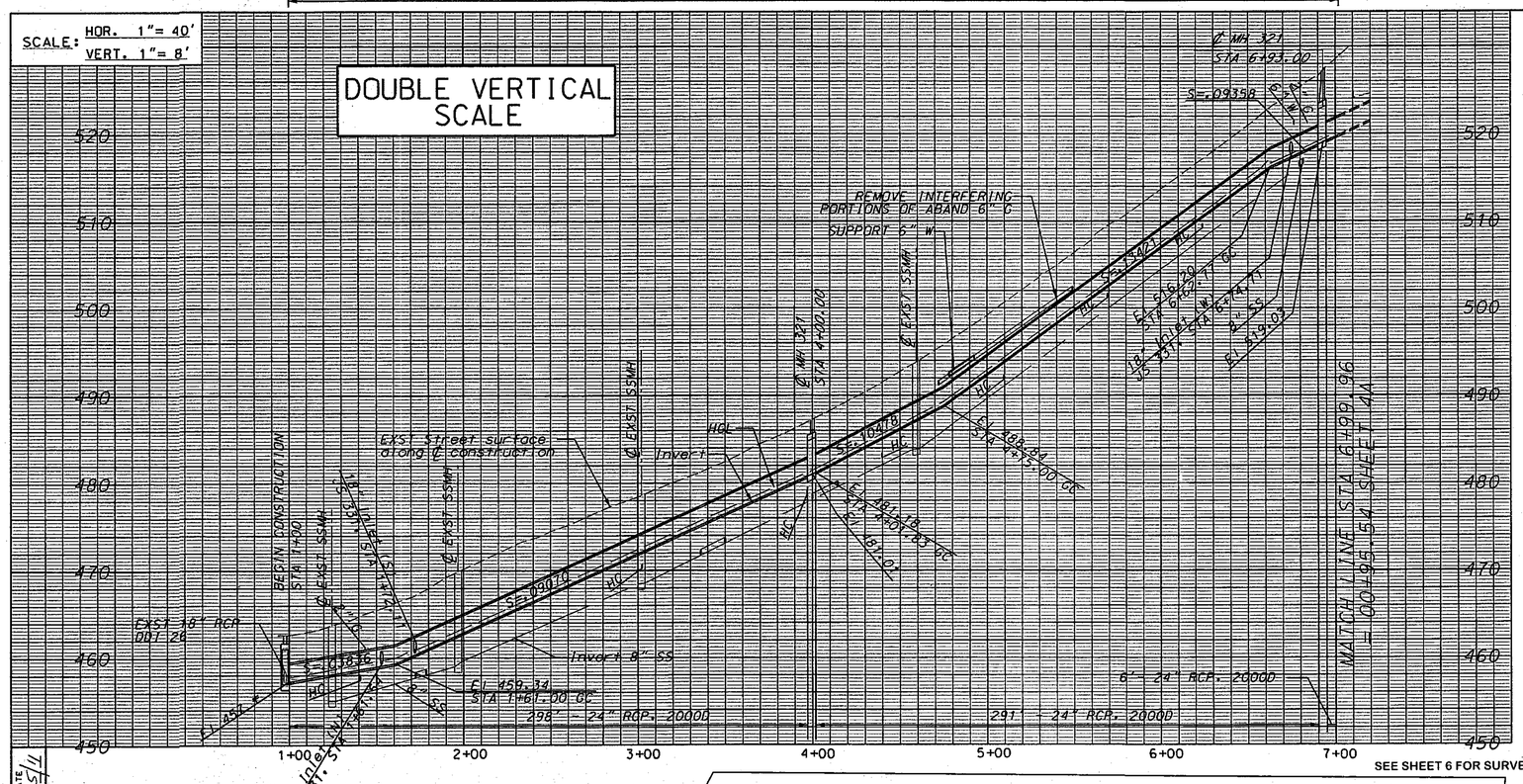

Note: Mainline, catch basins, and connector pipes are design to convey 100% of the $Q_{10/50}$. HGL has been restricted to 57% of the $Q_{10/50}$.

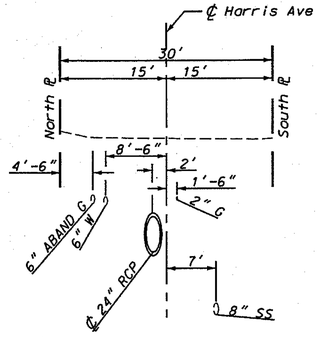

CROSS SECTION
STA. 3+00
SCALES: HOR. 1"=10'
VERT. 1"=4'

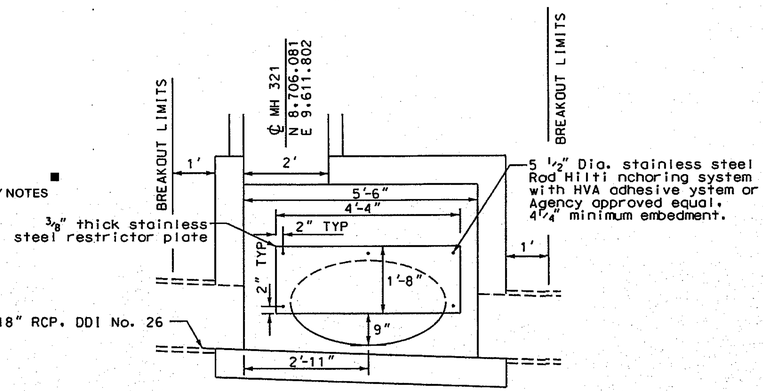

DETAIL "A"
SCALES: NO SCALE

NOTE A:
INSTALL 18" TIDEFLEX CHECKMATE INLINE CHECK VALVE (OR APPROVED EQUAL) AT UPSTREAM END OF CONNECTOR PIPE.

JS 331				
STA	A	B	C	EI S
1+61.54	60°	18"	2.25'	459.59
1+72.11	42°	18"	2.25'	459.96
6+74.33	70°	18"	1.75'	517.44

℄ Construction Curve Data
Δ_1 = 34°20'55"
R = 90.00'
T = 27.82'
L = 53.95'
BC = 1+16.96
EC = 1+70.92
PI = N 8,744.12
E 9,636.65

℄ Construction Curve Data
Δ_2 = 50°03'27"
R = 240.00'
T = 112.06'
L = 209.68'
BC = 2+74.78
EC = 4+84.46
PI = N 8,849.64
E 9,856.37

℄ Construction Curve Data
Δ_3 = 94°41'50"
R = 22.50'
T = 24.42'
L = 37.19'
BC = 6+62.77
EC = 6+99.96
PI = N 9,154.70
E 9,934.08

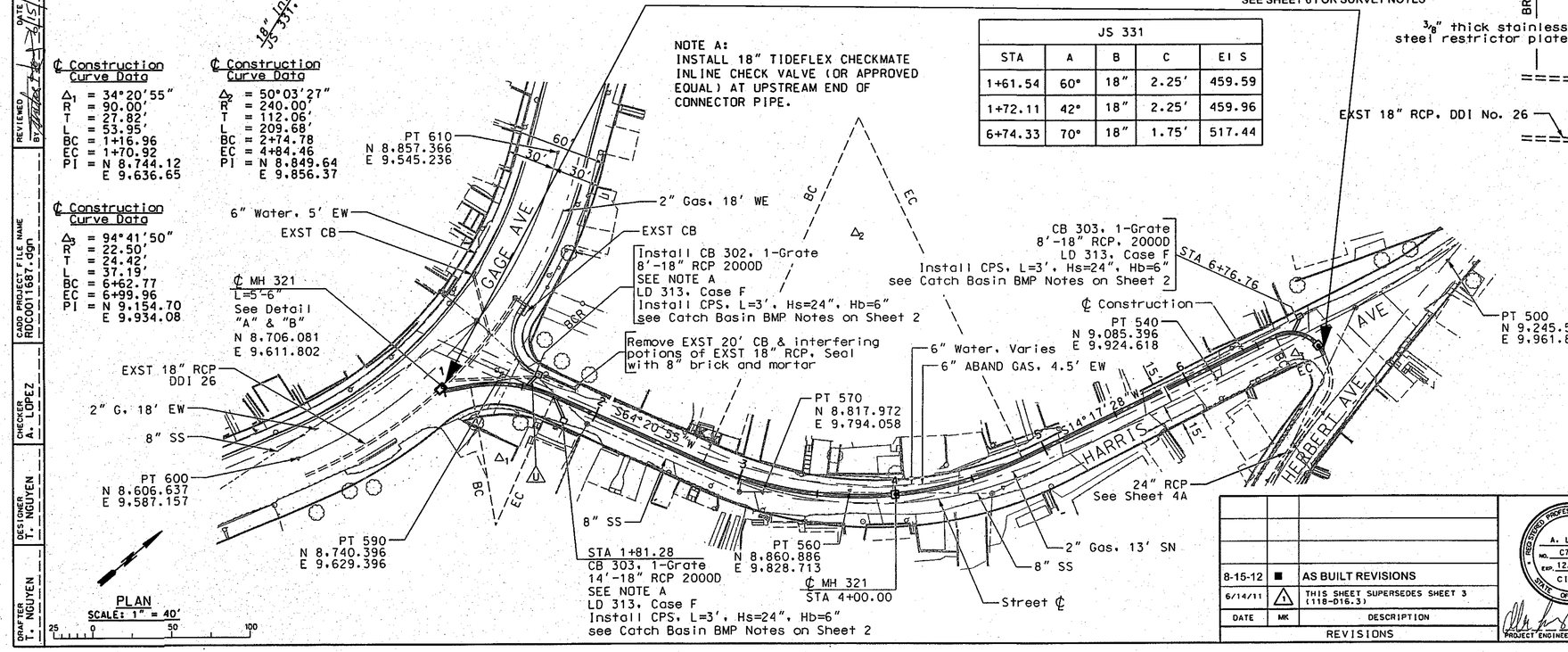

BENCHMARK: PT 590
RIVERA 1980 El 464.545
FD SPL & W DOWN 1"±35' SE/LY OF ℄ INT GAGE AVE ALONG HARRIS AVE

DATE	MK	DESCRIPTION
8-15-12	■	AS BUILT REVISIONS
6/14/11	1	THIS SHEET SUPERSEDES SHEET 3 (118-016.3)

REVISIONS

REGISTERED PROFESSIONAL ENGINEER A. LOPEZ NO. C75249 EXP. 12/31/11 CIVIL STATE OF CALIFORNIA
PROJECT ENGINEER DATE 6/14/11

COUNTY OF LOS ANGELES DEPARTMENT OF PUBLIC WORKS

DRAINAGE DISTRICT IMPROVEMENT NO. 26

HARRIS AVENUE LATERAL

PLAN AND PROFILE
STA 1+00 TO STA 7+01.89

RDC0011687 | JOB X2101572 | DWG 118-016.7 | SHEET 3A OF 6

DATE 6/15/11 | REVIEWED BY | CADD PROJECT FILE NAME RDC0011687.dgn | CHECKER A. LOPEZ | DESIGNER T. NGUYEN | DRAFTER T. NGUYEN

AS BUILT DRAWINGS