COUNTY OF LOS ANGELES
DEPARTMENT OF PUBLIC WORKS

HACIENDA CHANNEL - CAMINO CHANNEL
LOW FLOW CHANNEL AND INVERT ACCESS RAMP

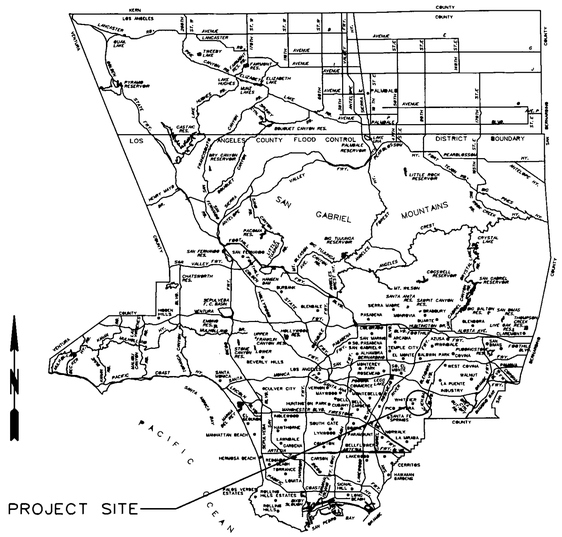

Thomas Bros. Pg. 678 B4-5

LOCATION MAP

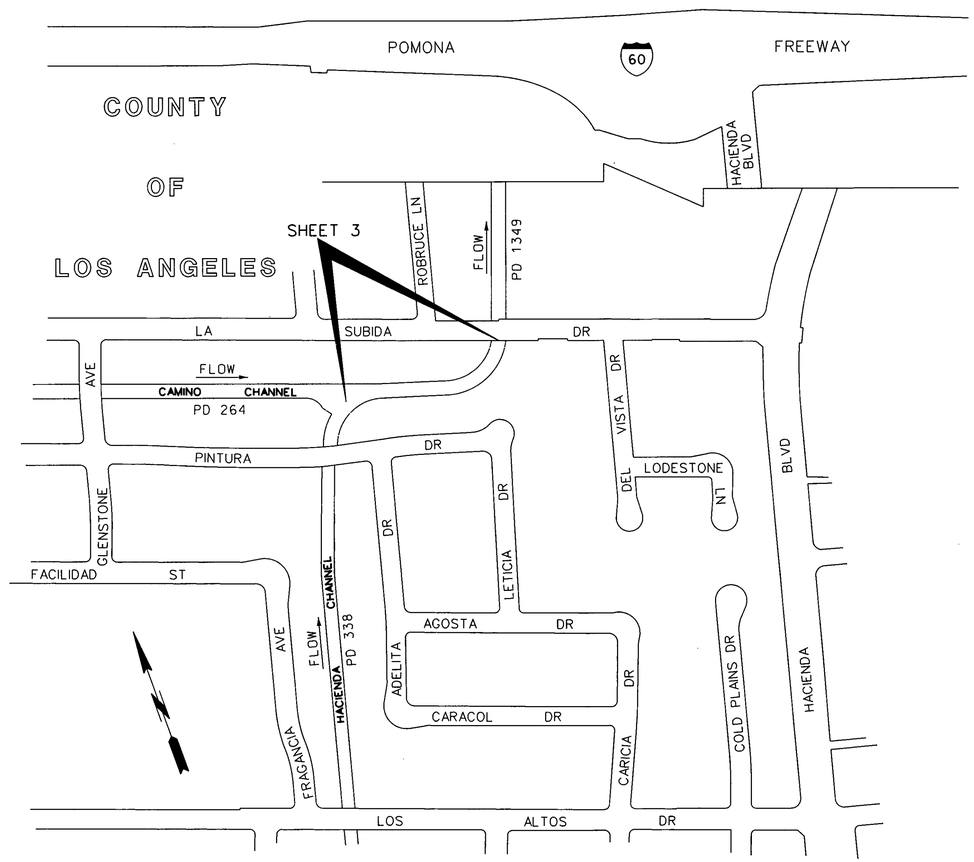

VICINITY MAP
NOT TO SCALE

INDEX TO PROJECT PLANS

SH. NO.	DESCRIPTION
1.	TITLE SHEET
2.	GENERAL NOTES AND BORING LOG △1
3.	PLAN - STA 0+43.15 TO STA 4+79
4.	LOW FLOW CHANNEL PROFILE AND CROSS SECTIONS
5.	INVERT ACCESS RAMP PLAN AND PROFILE
6.	INVERT ACCESS RAMP CROSS SECTIONS AND DETAILS

REFERENCES

DRAWINGS: PD 264 - 228-F15.1-.3
PD 338 - 228-F22.1-.2
PD 1349 - 228-F73.1-.3
SURVEY NOTES: PWFB 1029 pages 1651-1660

UTILITIES

CABLE: TIME WARNER CABLE
GAS: THE GAS COMPANY
SEWER: LACoDPW SEWER MAINTENANCE DIVISION
WATER: SAN GABRIEL VALLEY WATER COMPANY

PD052609

TWO WORKING DAYS BEFORE YOU DIG
CALL USA TOLL FREE
1-800-227-2600

APPROVED GAIL FARBER, DIRECTOR OF PUBLIC WORKS
BY [signature] DEPUTY DIRECTOR — DATE 8/12/14

RECOMMENDED
BY [signature] ASSISTANT DEPUTY DIRECTOR — DATE 8/11/14

SUBMITTED
BY [signature] — DATE 8/11/14

DATE	MK	DESCRIPTION
1-7-16	△1	CHANGED SHT 2 NAME

REVISIONS

REGISTERED PROFESSIONAL ENGINEER THUAN D NGUYEN No. 79096 CIVIL STATE OF CALIFORNIA

[signature] 7/24/2014
PROJECT ENGINEER — DATE

COUNTY OF LOS ANGELES DEPARTMENT OF PUBLIC WORKS

HACIENDA CHANNEL - CAMINO CHANNEL
LOW FLOW CHANNEL AND INVERT ACCESS RAMP

TITLE SHEET

FCC0001236 | JOB EF11212157 | DWG 228-D7.1 | SHEET 1 OF 6

DRAFTER T. NGUYEN | DESIGNER T. NGUYEN | CHECKER J. NG | CADD PROJECT FILE NAME FCC0001236.dgn

GENERAL NOTES

1. THE WORK SHOWN ON THESE DRAWINGS REQUIRES THE PRIME CONTRACTOR TO HAVE A VALID CLASS A LICENSE ISSUED BY THE STATE OF CALIFORNIA.
2. ALL FIELD BOOK REFERENCES ARE TO LOS ANGELES COUNTY DEPARTMENT OF PUBLIC WORKS FIELD BOOKS, UNLESS OTHERWISE NOTED.
3. ELEVATIONS SHOWN ARE IN FEET BASED ON VERTICAL DATUM NAVD 1988 WHITTIER 2005 ADJUSTMENT.
4. STATIONS SHOWN ON THE PLANS ARE ALONG CENTER LINE OF CHANNEL OR CONSTRUCTION.
5. THE CONTRACTOR SHALL MAKE EXPLORATORY EXCAVATIONS TO DETERMINE THE DEPTH AND LOCATION OF EXISTING UTILITIES WHERE SO INDICATED BY THE SYMBOL "△".
6. ALL EXISTING UTILITIES SHOWN ON THE PLANS ARE THE PROPERTY OF THE APPLICABLE AGENCY AS LISTED ON SHEET 1, UNLESS OTHERWISE NOTED.
7. EXISTING UTILITIES SHALL BE MAINTAINED IN PLACE BY THE CONTRACTOR, UNLESS OTHERWISE NOTED.
8. WHEN INDICATED ON THE PLANS, SANITARY SEWERS AND HOUSE CONNECTIONS SHALL BE PROTECTED IN ACCORDANCE WITH SPPWC STANDARD PLAN 225-2.

STRUCTURAL NOTES

1. DIMENSIONS FROM FACE OF CONCRETE TO STEEL ARE TO CENTER OF BAR, UNLESS OTHERWISE SHOWN.
2. CONCRETE DIMENSIONS SHALL BE MEASURED HORIZONTALLY OR VERTICALLY ON THE PROFILE, AND PARALLEL TO OR AT RIGHT ANGLES (OR RADIALLY) TO CENTER LINE OF CONSTRUCTION OF THE PLAN EXCEPT AS OTHERWISE SHOWN.
3. ALL BAR BENDS AND HOOKS SHALL CONFORM TO THE AMERICAN CONCRETE INSTITUTE'S "BUILDING CODE REQUIREMENT FOR REINFORCED CONCRETE", LATEST EDITION, SECTION 7.2.
4. TRANSVERSE CONSTRUCTION JOINTS IN WALLS AND SLABS SHALL BE IN THE SAME PLANE. NO STAGGERING OF JOINTS WILL BE PERMITTED. TRANSVERSE CONSTRUCTION JOINTS SHALL BE NORMAL OR RADIAL TO THE CENTERLINE OF CONSTRUCTION.
5. THE TRANSVERSE REINFORCING STEEL SHALL TERMINATE ONE AND ONE-HALF INCHES FROM THE CONCRETE SURFACES UNLESS OTHERWISE SHOWN ON THE STRUCTURAL DETAILS.
6. EXPOSED EDGES OF CONCRETE MEMBERS SHALL BE ROUNDED OR BEVELED.
7. NO SPLICES IN TRANSVERSE STEEL REINFORCEMENT WILL BE PERMITTED OTHER THAN SHOWN ON THE DRAWINGS WITHOUT APPROVAL OF THE ENGINEER. NO MORE THAN TWO SPLICES WILL BE PERMITTED IN ANY LONGITUDINAL BAR BETWEEN TRANSVERSE JOINTS. SPLICES SHALL BE STAGGERED.
8. LONGITUDINAL BARS SHALL BE LAPPED 20 BAR DIAMETERS AT SPLICES. TRANSVERSE BARS SHALL BE LAPPED 30 BAR DIAMETERS AT SPLICES.

CONCRETE REMOVAL NOTES

1. WHERE REINFORCEMENT SHALL BE RETAINED THROUGH THE NEW JOINT, MAKE A 1-1/2 INCH DEEP SAW CUT ON ALL EXPOSED CONCRETE SURFACES ALONG THE REMOVAL LIMITS, UNLESS OTHERWISE NOTED ON THE PLANS. DO NOT CUT OR DAMAGE EXISTING REINFORCEMENT.
2. USING HAND-HELD EQUIPMENT, CAREFULLY REMOVE THE CONCRETE FOR THE FULL DEPTH OF THE WALL OR SLAB AND FOR A MINIMUM DISTANCE FROM THE SAW CUT EQUAL TO THE LONGEST EXTENSION OF THE BARS TO BE EXTENDED INTO THE NEW CONSTRUCTION. THIS EXTENSION SHALL BE 30 BAR DIAMETERS, UNLESS OTHERWISE NOTED.
3. CUT EXISTING REINFORCEMENT TO THE REQUIRED BAR EXTENSION.
4. IF IT WILL NOT DAMAGE THE CONCRETE TO BE LEFT IN PLACE, THE REMAINING CONCRETE MAY BE REMOVED BY ANY SUITABLE METHOD UPON APPROVAL OF THE ENGINEER WHO SHALL BE THE SOLE JUDGE OF THE USE OF ANY CONCRETE REMOVAL EQUIPMENT. HOWEVER, EXPLOSIVES OR A WRECKING BALL (OR OTHER SIMILAR DEVICE) WILL NOT BE PERMITTED.

INDEX TO STANDARD PLANS

LA COUNTY DEPARTMENT OF PUBLIC WORKS (LACDPW)

STD PLAN	TITLE
3090-1	CRITERIA FOR THE DESIGN OF SHORING FOR EXCAVATIONS
3091-1	SAMPLE SHEET FOR USE AS A GUIDE IN PREPARING CALCULATIONS FOR SHORING OF EXCAVATIONS
3093-1	UNIFIED SOIL CLASSIFICATION SYSTEM
6002-1	PORTABLE SECURITY FENCE FOR OPEN TRENCHES
6008-1	MINIMUM PUBLIC SAFETY REQUIREMENT FOR OPEN EXCAVATIONS
6106-1	REINFORCEMENT DETAILS

STANDARD PLANS FOR PUBLIC WORKS CONSTRUCTION (SPPWC)

STD PLAN	TITLE
225-2	BLANKET PROTECTION FOR PIPES

△1

SUMMARY LOG OF BORING B1

Geotechnical and Materials Engineering Division - Los Angeles County Department of Public Works

PROJECT Hacienda Channel - Low-Flow Construction CLIENT Design Division PAGE 1 OF 1
PROJECT ID FCC0001236 DRILLER LACDPW LOGGED BY Erick Del Bosque TOTAL DEPTH 16.5'
TYPE/DIAMETER OF BORING Hollow stem auger with 6-inch outside-diameter ELEVATION N/A
DATE(S) 10/25/12 MONITORING WELL INSTALLED? No HAMMER WEIGHT (LBS.) 140 DROP HEIGHT (IN.) 30
LOCATION N33° 59' 24.8", W117° 58' 23.9"

Note: This log contains observations and interpretations that are valid only for the specific date and location of the boring. Subsurface conditions vary between borings and with time. Material descriptions are derived using visual classification methods and may vary from descriptions/classifications based on laboratory testing.

LABORATORY TESTING: In-situ γ_d (pcf)	In-situ MC (%)	Sieve % Passing No. 4	Sieve % Passing No. 200	DEPTH (feet)	FIELD DATA: Type	Sample No.	Blow Count (per 6 in. Max)	Sample Time Units Comments PID - PPM	Graphic Log	USCS	LITHOLOGIC DESCRIPTION
		89.0	68.2	0–4		1B		Corrosion, Expansion Index and USC Tests		CL	Lean Clay, stiff, dark brown, moist, some sands and trace silts
120.2	12.4	100	81.7	5		2R	16 28 42	Density and USC Tests			@ 5', Increase to hard, color changes to brown, no visible sands or silts
110.1	16.5			10–11		3R	8 13 19	Density and Shear Tests			@10', Decrease to very stiff, trace sands and silts
				15–16		4R	5 11 12				@15', Decrease to stiff, silt content increases

PD052609

DATE	MK	DESCRIPTION
1-7-16	△1	ADDED BORING LOG

REVISIONS

REGISTERED PROFESSIONAL ENGINEER THUAN D NGUYEN No. 79096 CIVIL STATE OF CALIFORNIA

PROJECT ENGINEER 7/14/2014 DATE

COUNTY OF LOS ANGELES DEPARTMENT OF PUBLIC WORKS

HACIENDA CHANNEL - CAMINO CHANNEL

LOW FLOW CHANNEL AND INVERT ACCESS RAMP

△1

GENERAL NOTES AND BORING LOG

FCC0001236 | JOB EF11212157 | DWG 228-D7.2 | SHEET 2 OF 6

DRAFTER T. NGUYEN | DESIGNER T. NGUYEN | CHECKER J. NG | CADD PROJECT FILE NAME FCC0001236.dgn | REVIEWED | DATE

BENCHMARK: PT#9
NAVD 88 (BASELINE 2005) El. 463.375
2" x 2" HUB w/ TACK @ CONFLUENCE
OF HACIENDA CHANNEL & LINE A.
±25' S/W OF NOSE & ±10' W/O HACIENDA CHANNEL

℄ LOW FLOW CHANNEL CURVE DATA

△1= 75°15'12"	△2= 17°56'52"
R= 155.00'	R= 152.50'
T= 119.48'	T= 24.08'
L= 203.58'	L= 47.77'
BC= STA 0+43.15	BC= STA 4+31.23
EC= STA 2+46.73	EC= STA 4+79
PI= N 1,818,790.20	PI= N 1,818,885.84
E 6,569,917.48	E 6,569,603.68

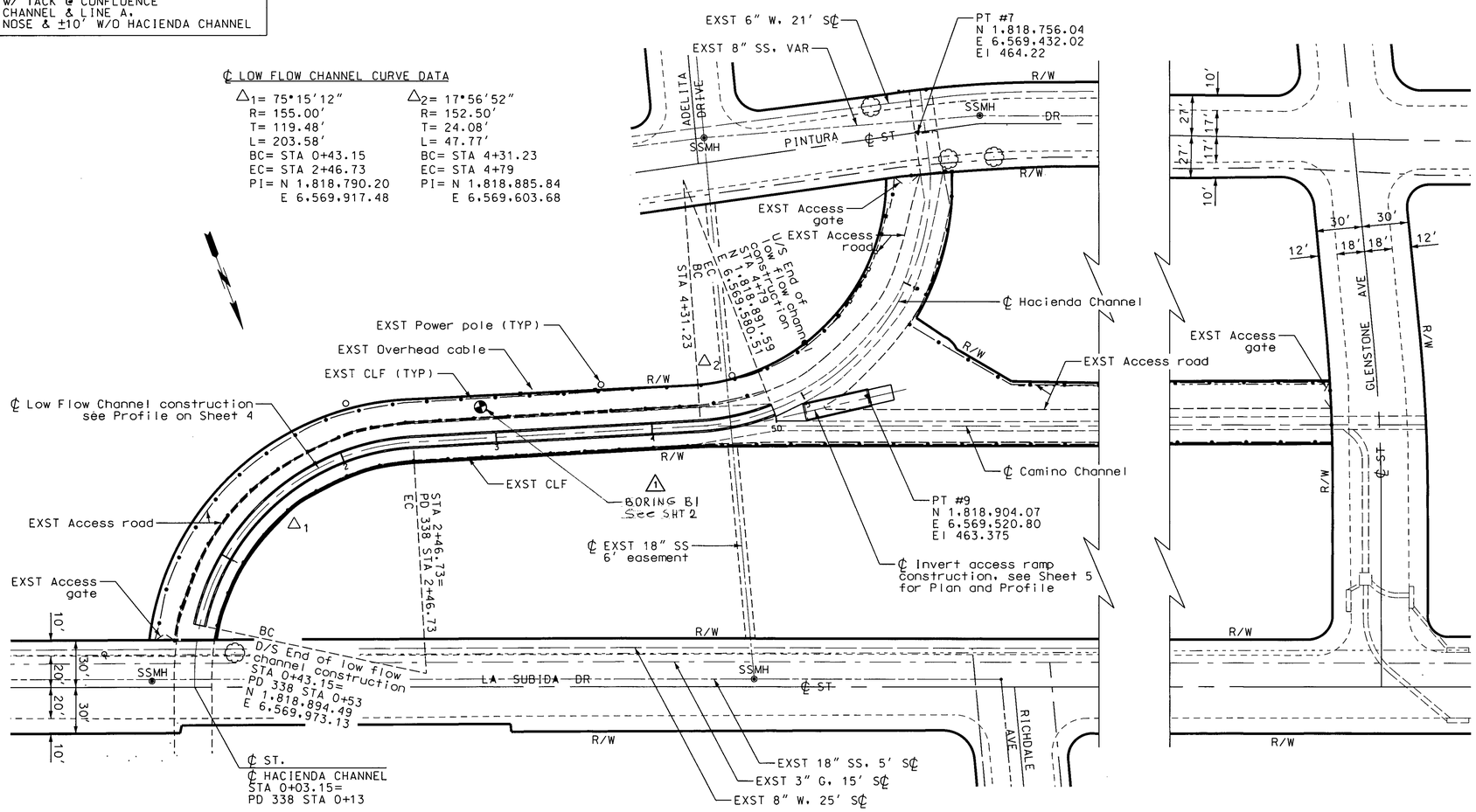

PLAN
LOW-FLOW CHANNEL
SCALE: 1" = 40'
25 0 50 100

PD052609

DATE	MK	DESCRIPTION
1-7-16	△1	ADDED BORING LOG

REVISIONS

REGISTERED PROFESSIONAL ENGINEER THUAN D NGUYEN No. 79096 CIVIL STATE OF CALIFORNIA

PROJECT ENGINEER DATE 7/14/2016

COUNTY OF LOS ANGELES DEPARTMENT OF PUBLIC WORKS

HACIENDA CHANNEL - CAMINO CHANNEL
LOW FLOW CHANNEL AND INVERT ACCESS RAMP

PLAN
STA 0+43.15 TO STA 4+79

FCC0001236	JOB EF11212157	DWG 228-D7.3	SHEET 3 OF 6

DRAFTER T. NGUYEN | DESIGNER T. NGUYEN | CHECKER J. NG | CADD PROJECT FILE NAME FCC0001236.dgn | REVIEWED | DATE

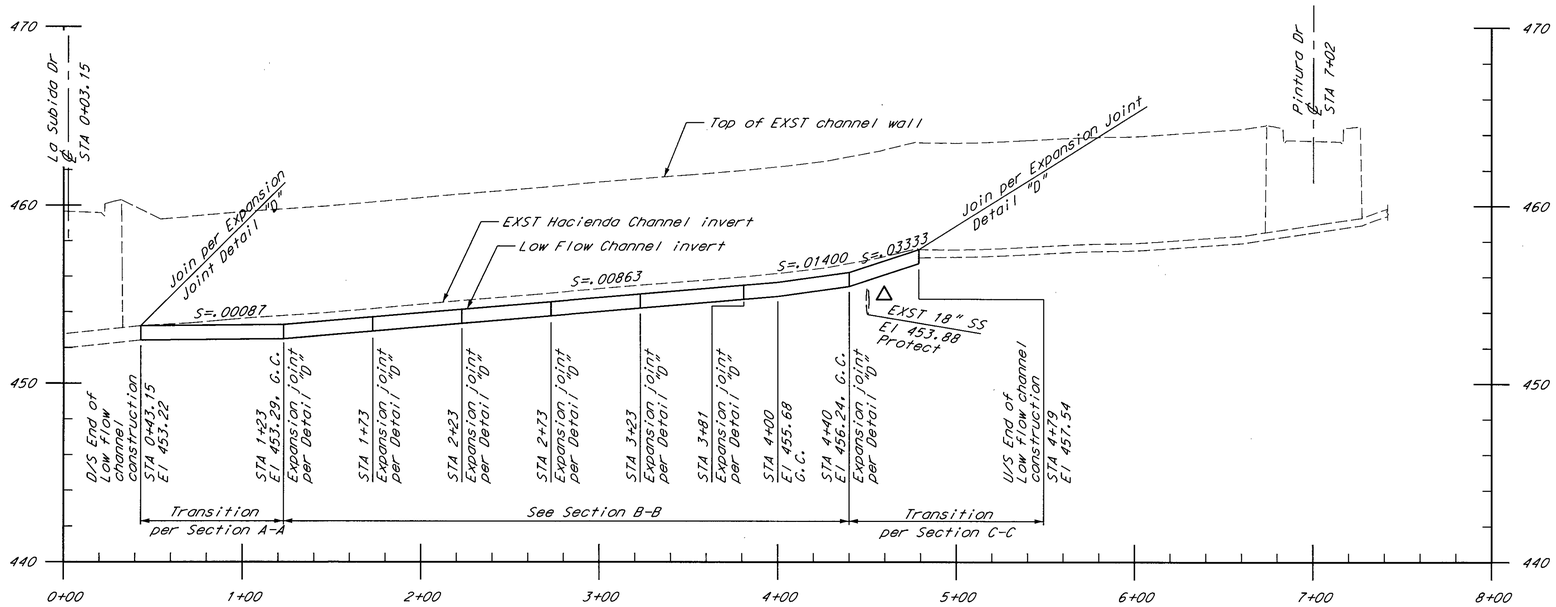

LOW FLOW CHANNEL ℄ PROFILE (SHEET 3)

SCALE: HOR. 1"= 40'
VERT. 1"=4'

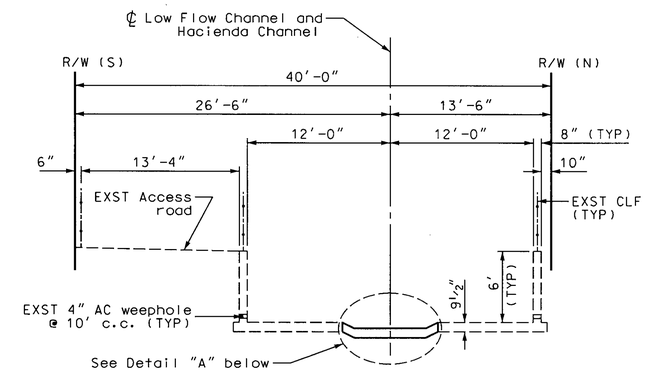

SECTION A-A (LOOKING UPSTREAM)

STA 0+43.15 to STA 1+23

NOT TO SCALE

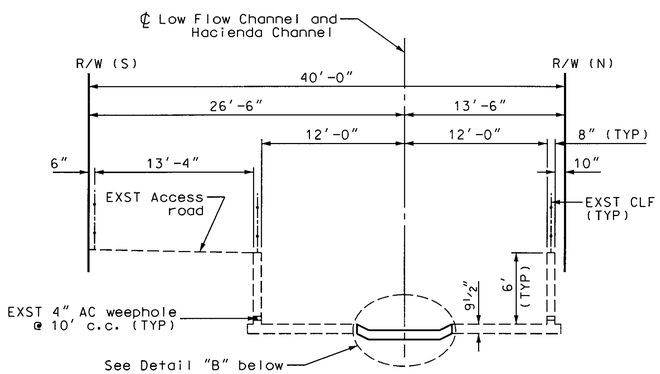

SECTION B-B (LOOKING UPSTREAM)

STA 1+23 to STA 4+40

NOT TO SCALE

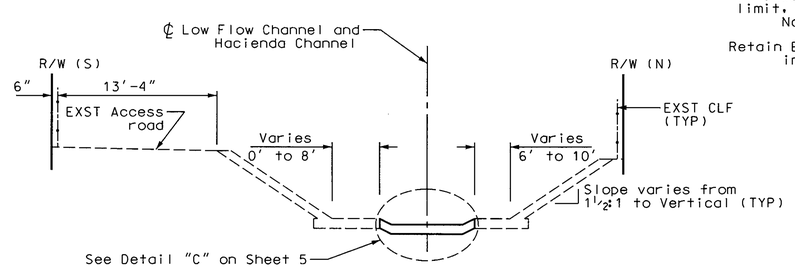

SECTION C-C (LOOKING UPSTREAM)

STA 4+40 to STA 4+79

NOT TO SCALE

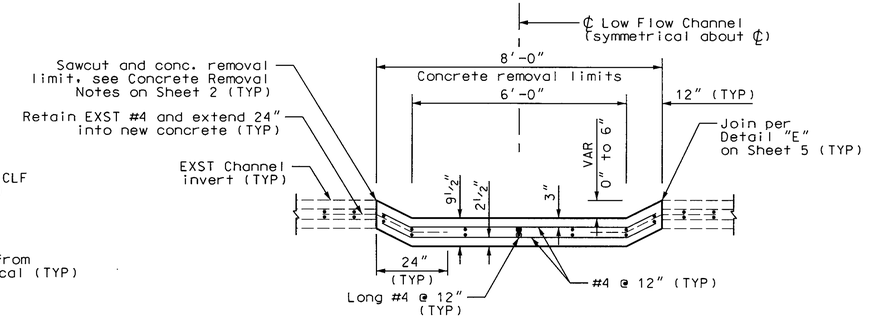

DETAIL "A"

STA 0+43.15 to STA 1+23

NOT TO SCALE

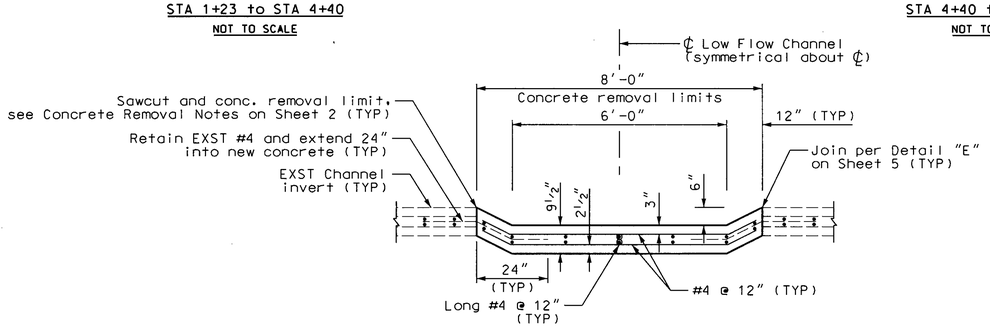

DETAIL "B"

STA 1+23 to STA 4+40

NOT TO SCALE

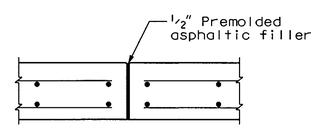

DETAIL "D"

TRANSVERSE EXPANSION JOINT

NOT TO SCALE

PD052609

DATE	MK	DESCRIPTION

REVISIONS

REGISTERED PROFESSIONAL ENGINEER THUAN D NGUYEN No. 79096 CIVIL STATE OF CALIFORNIA

PROJECT ENGINEER — DATE 3/24/2014

COUNTY OF LOS ANGELES DEPARTMENT OF PUBLIC WORKS

HACIENDA CHANNEL - CAMINO CHANNEL

LOW FLOW CHANNEL AND INVERT ACCESS RAMP

LOW FLOW CHANNEL PROFILE AND CROSS SECTIONS

FCC0001236 | JOB EF11212157 | DWG 228-D7.4 | SHEET 4 OF 6

DRAFTER T. NGUYEN | DESIGNER T. NGUYEN | CHECKER J. NG | CADD PROJECT FILE NAME FCC0001236.dgn | REVIEWED BY [illegible] DATE 7/24/14

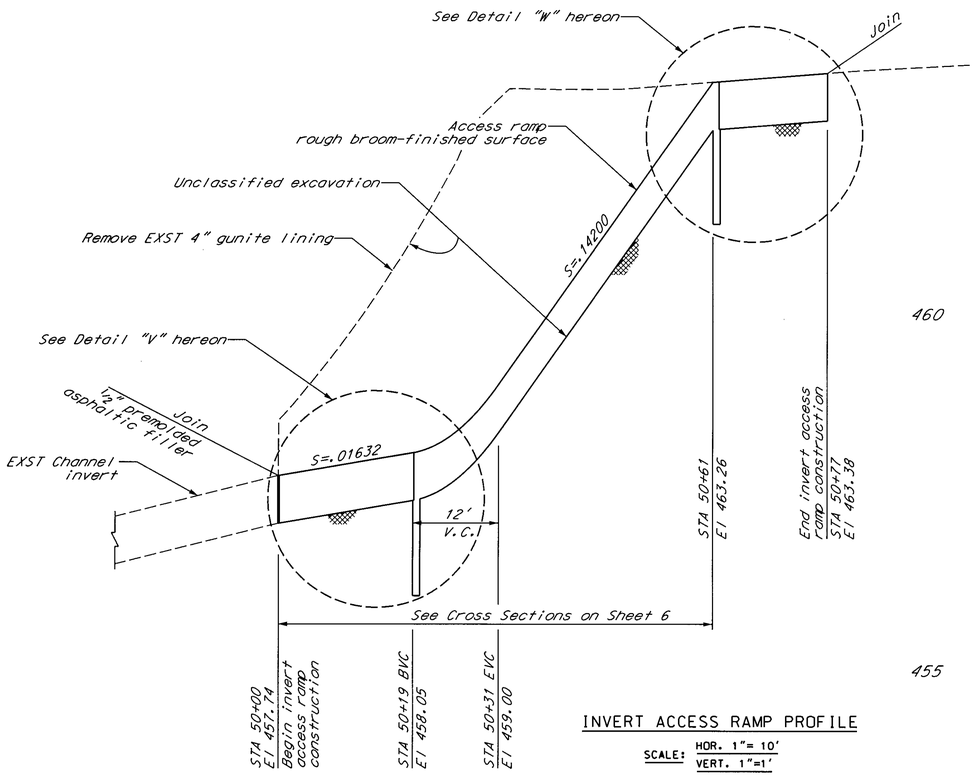

INVERT ACCESS RAMP PROFILE

SCALE: HOR. 1"= 10' / VERT. 1"=1'

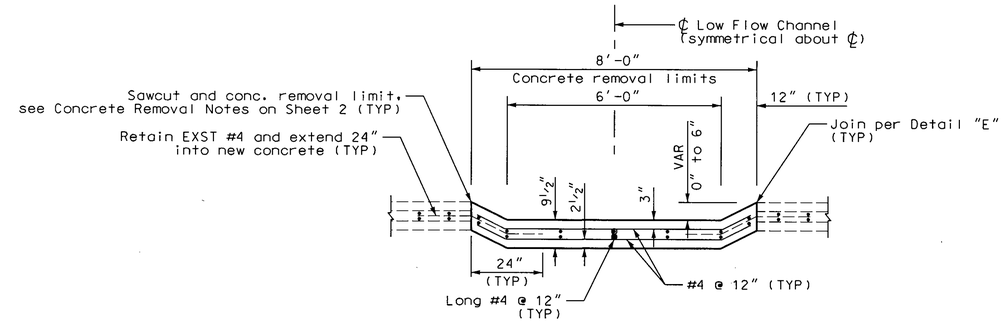

DETAIL "C" (SHEET 4)

STA 4+40 to STA 4+79

NOT TO SCALE

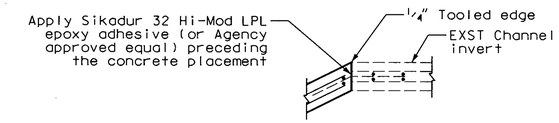

DETAIL "E"

LONGITUDINAL JOINT

NOT TO SCALE

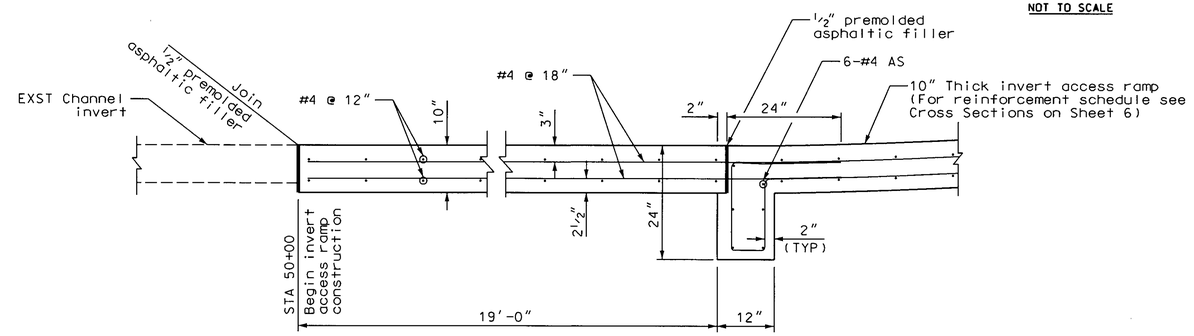

DETAIL "V"

NOT TO SCALE

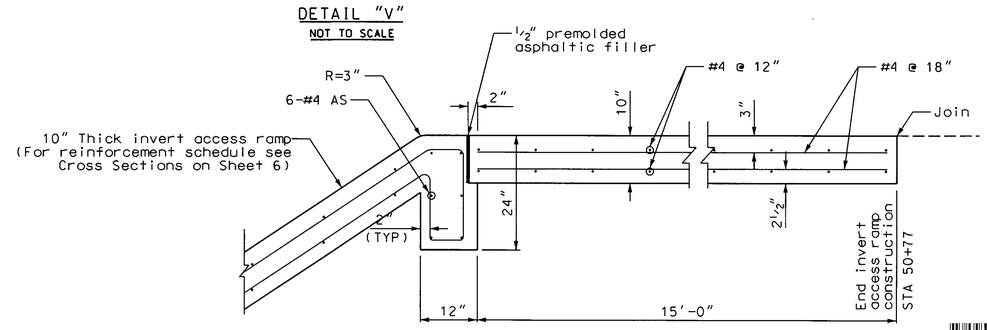

DETAIL "W"

NOT TO SCALE

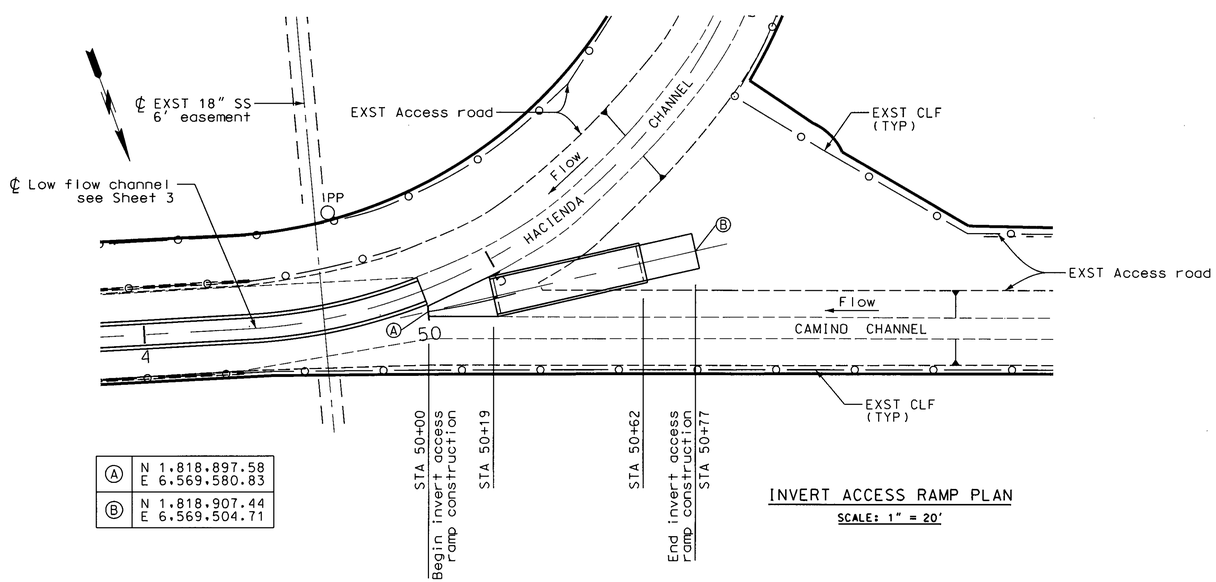

A	N 1,818,897.58 E 6,569,580.83
B	N 1,818,907.44 E 6,569,504.71

INVERT ACCESS RAMP PLAN

SCALE: 1" = 20'

PD052609

DATE	MK	DESCRIPTION

REVISIONS

REGISTERED PROFESSIONAL ENGINEER THUAN D NGUYEN No. 79096 CIVIL STATE OF CALIFORNIA

PROJECT ENGINEER DATE 7/24/2014

COUNTY OF LOS ANGELES DEPARTMENT OF PUBLIC WORKS

HACIENDA CHANNEL - CAMINO CHANNEL

LOW FLOW CHANNEL AND INVERT ACCESS RAMP

INVERT ACCESS RAMP PLAN AND PROFILE

FCC0001236 | JOBEF11212157 | DWG 228-D7.5 | SHEET 5 OF 6

DRAFTER T. NGUYEN | DESIGNER T. NGUYEN | CHECKER J. NG | CADD PROJECT FILE NAME FCC0001236.dgn | REVIEWED BY [illegible] | DATE 7/24/14

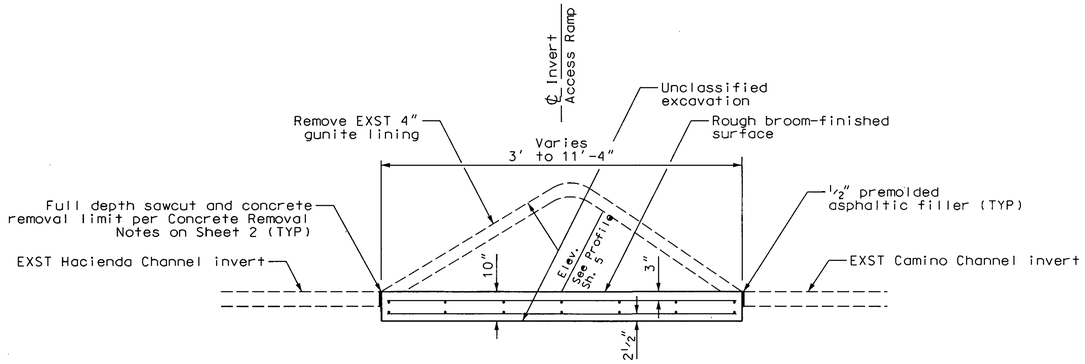

STA 50+00 TO STA 50+19

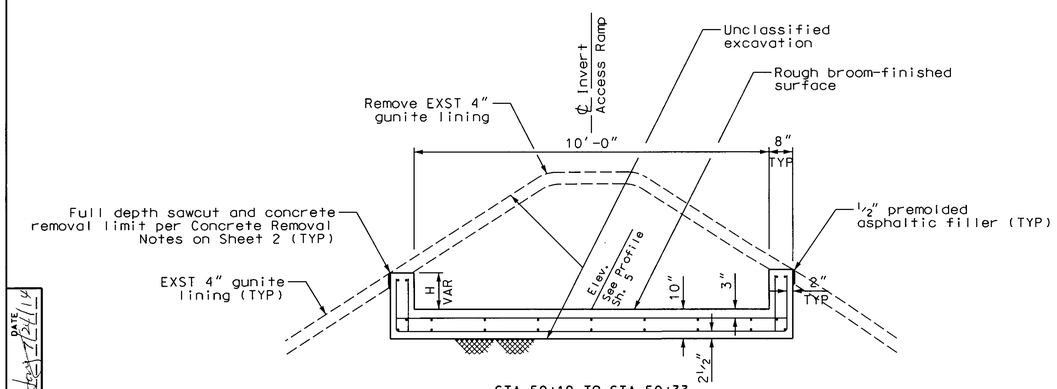

STA 50+19 TO STA 50+33
H = 0" TO 12"

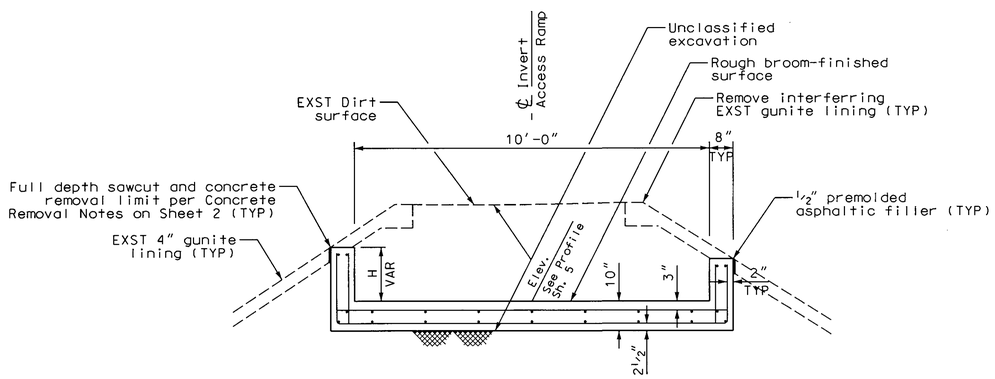

STA 50+33 TO STA 50+49
H = 12" TO 24"

INVERT ACCESS RAMP
CROSS SECTIONS
NOT TO SCALE

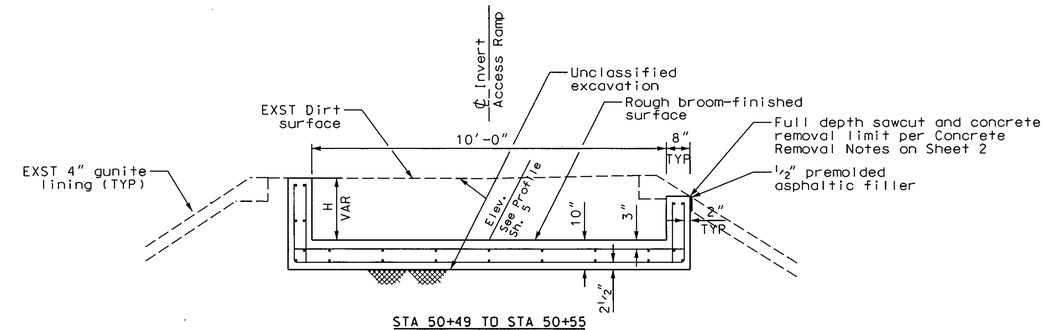

STA 50+49 TO STA 50+55
H = 10" TO 20"

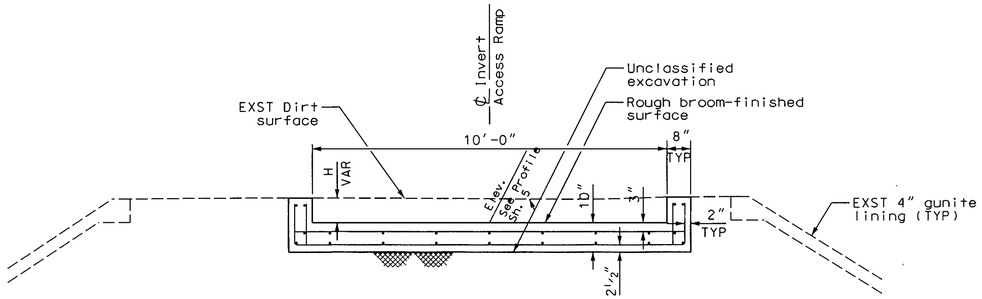

STA 50+55 TO STA 50+62
H = 0" TO 10"

NOTES:

1. All transverse reinforcements shall be #4 @ 12"
2. All longitudinal reinforcements shall be #4 @ 18"

PD052609

DATE	MK	DESCRIPTION

REVISIONS

REGISTERED PROFESSIONAL ENGINEER THUAN D NGUYEN No. 79096 CIVIL STATE OF CALIFORNIA

PROJECT ENGINEER 7/24/2014 DATE

COUNTY OF LOS ANGELES DEPARTMENT OF PUBLIC WORKS

HACIENDA CHANNEL - CAMINO CHANNEL
LOW FLOW CHANNEL AND INVERT ACCESS RAMP

INVERT ACCESS RAMP
CROSS SECTIONS AND DETAILS

FCC0001236 | JOB EF11212157 | DWG 228-D7.6 | SHEET 6 OF 6

DRAFTER T. NGUYEN | DESIGNER T. NGUYEN | CHECKER J. NG | CADD PROJECT FILE NAME FCC0001236.dgn | REVIEWED BY [illegible] DATE 7/24/14