COUNTY OF LOS ANGELES
DEPARTMENT OF PUBLIC WORKS

PD T1203
DRAINAGE EXTENSION

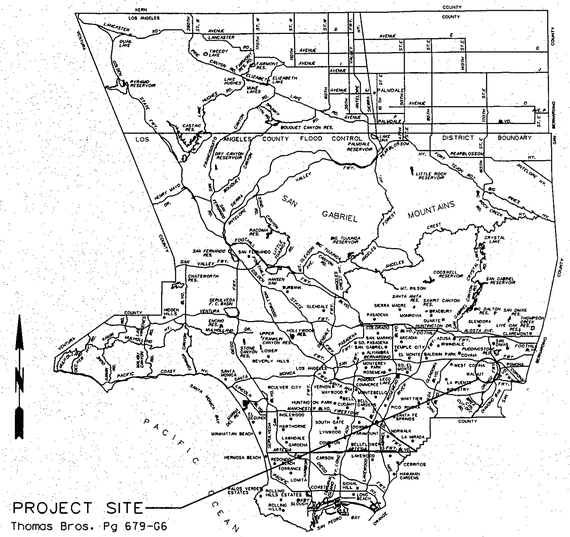

LOCATION MAP

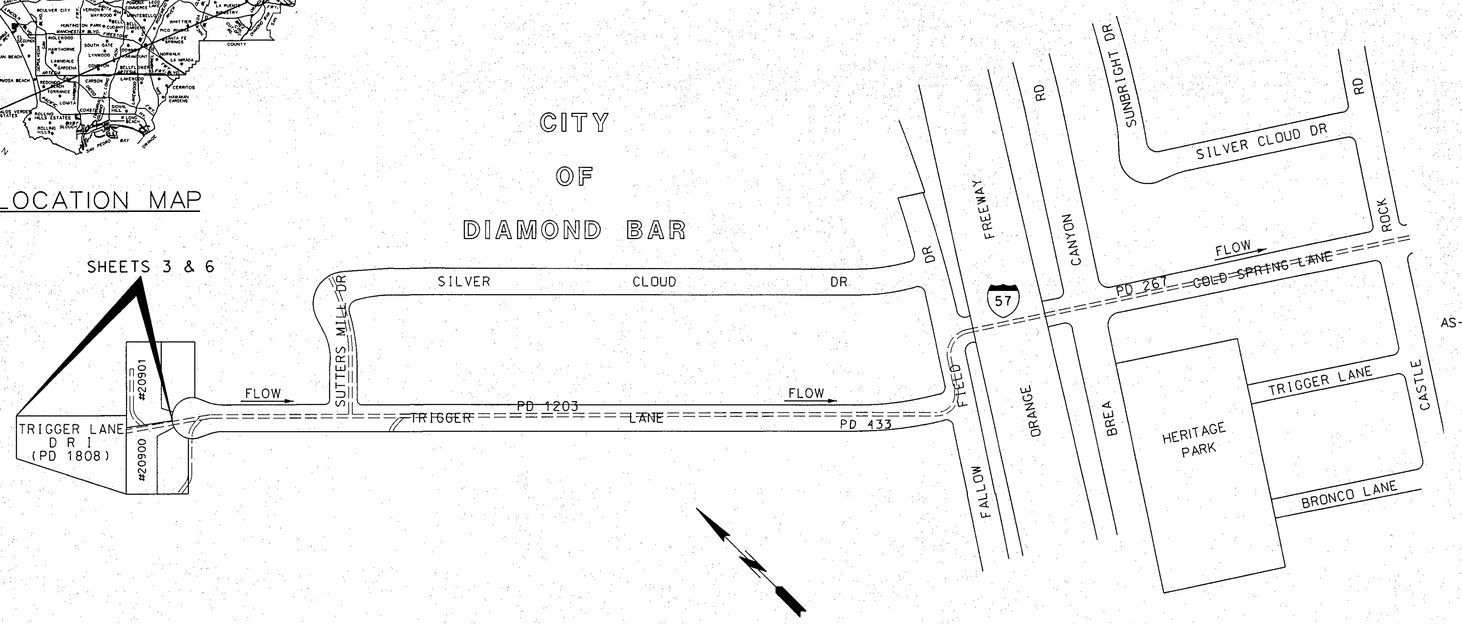

VICINITY MAP
NOT TO SCALE

INDEX TO PROJECT PLANS

SH. NO.	DESCRIPTION
1.	TITLE SHEET
2.	GENERAL NOTES AND INDEX TO STANDARD PLANS
3.	PLAN AND PROFILES STA 22+31.58 TO STA 22+69.08 (CLOSE CONDUIT) STA 1+07 TO STA 2+40 (ACCESS ROAD AND DRIVEWAY RECONSTRUCTION)
4.	ACCESS ROAD AND DRIVEWAY CROSS SECTIONS
5.	RETAINING WALL AND 18" RCP PROFILE INLET STRUCTURE DETAIL
6.	SEDIMENT CLEANOUT PLAN, PROFILE, AND CROSS SECTION STA 100+00 TO STA 102+17
7.	INLET STRUCTURAL DETAILS

AS-BUILT DRAWINGS: PD 267 - 313-F2.1-.3
PD 1203 - 313-F45.1-.3
PD 1808 - 313-F96.1-.5
SURVEY NOTES: PWFB 1033 pages 1001-1008

UTILITIES

ELECTRIC - SOUTHERN CALIFORNIA EDISON
GAS - SOUTHERN CALIFORNIA GAS COMPANY
SEWER - LACoDPW SEWER MAINTENANCE DIVISION
WATER - WALNUT VALLEY WATER DISTRICT

PD052610

CADD PROJECT FILE NAME FCC0001236.dgn
CHECKER J. NG
DESIGNER T. NGUYEN
DRAFTER T. NGUYEN

TWO WORKING DAYS BEFORE YOU DIG
CALL USA TOLL FREE
1-800-227-2600

APPROVED GAIL FARBER DIRECTOR OF PUBLIC WORKS
BY [signature] DEPUTY DIRECTOR 8/12/14 DATE
RECOMMENDED
BY [signature] ASSISTANT DEPUTY DIRECTOR 8/11/14 DATE
SUBMITTED
BY [signature] 8/11/14 DATE

DATE	MK	DESCRIPTION

REVISIONS

REGISTERED PROFESSIONAL ENGINEER THUAN D NGUYEN No. 79096 CIVIL STATE OF CALIFORNIA
[signature] PROJECT ENGINEER 7/24/2014 DATE

COUNTY OF LOS ANGELES DEPARTMENT OF PUBLIC WORKS
PD T1203
DRAINAGE EXTENSION
TITLE SHEET

FCC0001236 | JOB EF11212156 | DWG 313-D2.1 | SHEET 1 OF 7

GENERAL NOTES

1. THE WORK SHOWN ON THESE DRAWINGS REQUIRES THE PRIME CONTRACTOR TO HAVE A VALID CLASS A LICENSE ISSUED BY THE STATE OF CALIFORNIA.
2. ALL FIELD BOOK REFERENCES ARE TO LOS ANGELES COUNTY DEPARTMENT OF PUBLIC WORKS FIELD BOOKS, UNLESS OTHERWISE NOTED.
3. ELEVATIONS SHOWN ARE IN FEET BASED ON VERTICAL DATUM NAVD 1988 OTTERBEIN 2005.
4. STATIONS SHOWN ON THE PLANS ARE ALONG CENTER LINE OF CONDUIT OR ON A LINE NORMAL TO CENTER LINE OF CONDUIT.
5. STATIONS AND INVERT ELEVATIONS OF PIPE INLETS SHOWN ON THE PROFILES ARE AT THE INSIDE FACE OF THE CONDUIT, UNLESS OTHERWISE SHOWN.
6. PIPE CONNECTIONS TO STORM DRAIN SHALL CONFORM TO SPPWC STANDARD PLAN 340-2.
7. ALL PIPE IN OPEN TRENCH SHALL BE BEDDED ACCORDING TO LACDPW STANDARD PLAN 3080, CASE III, EXCEPT BELL AND SPIGOT PIPE WHICH SHALL BE CASE II BEDDING, UNLESS OTHERWISE SHOWN. "W" VALUES SHALL BE AS SPECIFIED ON STANDARD PLAN 3080 FOR CASE III BEDDING, NOTES (a), (b), AND (c). IF THE "W" VALUE AT THE TOP OF THE PIPE IS EXCEEDED, THE BEDDING SHALL BE MODIFIED, AND/OR PIPE OF ADDITIONAL STRENGTH SHALL BE PROVIDED. THE PROPOSED MODIFICATION SHALL BE APPROVED BY THE DEPARTMENT.
8. CONCRETE BACKFILL SHALL BE PROVIDED AROUND PIPE 21 INCHES IN DIAMETER OR LESS WHERE THE COVER IS EQUAL TO OR LESS THAN 2'-0", AROUND PIPE GREATER THAN 21 INCHES IN DIAMETER BUT LESS THAN 39 INCHES WHERE THE COVER IS LESS THAN 1'-3", AND FOR PIPE 39 INCHES OR GREATER WHERE THE COVER IS LESS THAN 1'-0". THE CONCRETE BACKFILL SHALL BE AS SPECIFIED ON LACDPW STANDARD PLAN 3080, NOTE 3.
9. EXISTING UTILITIES SHALL BE MAINTAINED IN PLACE BY THE CONTRACTOR, UNLESS OTHERWISE NOTED, AND ALL UTILITIES CROSSING THE TRENCH SHALL BE TEMPORARILY SUPPORTED TO THE SATISFACTION OF THE OWNER.

STRUCTURAL NOTES

1. DIMENSIONS FROM FACE OF CONCRETE TO STEEL ARE TO CENTER OF BAR, UNLESS OTHERWISE SHOWN.
2. CONCRETE DIMENSIONS SHALL BE MEASURED HORIZONTALLY OR VERTICALLY ON THE PROFILE, AND PARALLEL TO OR AT RIGHT ANGLES (OR RADIALLY) TO CENTER LINE OF CONSTRUCTION OF THE PLAN EXCEPT AS OTHERWISE SHOWN.
3. ALL BAR BENDS AND HOOKS SHALL CONFORM TO THE AMERICAN CONCRETE INSTITUTE'S "BUILDING CODE REQUIREMENT FOR REINFORCED CONCRETE", LATEST EDITION, SECTION 7.2.
4. TRANSVERSE CONSTRUCTION JOINTS IN WALLS AND SLABS SHALL BE IN THE SAME PLANE. NO STAGGERING OF JOINTS WILL BE PERMITTED. TRANSVERSE CONSTRUCTION JOINTS SHALL BE NORMAL OR RADIAL TO THE CENTERLINE OF CONSTRUCTION.
5. THE TRANSVERSE REINFORCING STEEL SHALL TERMINATE ONE AND ONE-HALF INCHES FROM THE CONCRETE SURFACES UNLESS OTHERWISE SHOWN ON THE STRUCTURAL DETAILS.
6. EXPOSED EDGES OF CONCRETE MEMBERS SHALL BE ROUNDED OR BEVELED.
7. NO SPLICES IN TRANSVERSE STEEL REINFORCEMENT WILL BE PERMITTED OTHER THAN SHOWN ON THE DRAWINGS WITHOUT APPROVAL OF THE ENGINEER. NO MORE THAN TWO SPLICES WILL BE PERMITTED IN ANY LONGITUDINAL BAR BETWEEN TRANSVERSE JOINTS. SPLICES SHALL BE STAGGERED.
8. LONGITUDINAL BARS SHALL BE LAPPED 20 BAR DIAMETERS AT SPLICES. TRANSVERSE BARS SHALL BE LAPPED 30 BAR DIAMETERS AT SPLICES.
9. LONGITUDINAL BARS SHALL BE CONTINUOUS AND EXTEND THROUGH ALL CONSTRUCTION JOINTS.
10. AT THE BEGINNING AND ENDING OF ALL POURS, A COMPLETE CURTAIN OF MAIN REINFORCEMENT SHALL BE PLACED THREE INCHES FROM THE TRANSVERSE CONSTRUCTION JOINTS.
11. UNLESS OTHERWISE SHOWN ON THE PLANS, TRANSVERSE CONSTRUCTION JOINTS (IN BOTH SLABS AND WALLS), SHALL BE PLACE AT THE END OF EACH POUR, BUT THE SPACING THEREOF SHALL NOT EXCEED 50 FEET NOR BE LESS THAN 10 FEET.

CONCRETE REMOVAL NOTES

1. WHERE REINFORCEMENT SHALL BE RETAINED THROUGH THE NEW JOINT, MAKE A 1-1/2 INCH DEEP SAW CUT ON ALL EXPOSED CONCRETE SURFACES ALONG THE REMOVAL LIMITS. DO NOT CUT OR DAMAGE EXISTING REINFORCEMENT.
2. USING HAND-HELD EQUIPMENT, CAREFULLY REMOVE THE CONCRETE FOR THE FULL DEPTH OF THE WALL OR SLAB AND FOR A MINIMUM DISTANCE FROM THE SAW CUT EQUAL TO THE LONGEST EXTENSION OF THE BARS TO BE EXTENDED INTO THE NEW CONSTRUCTION. THIS EXTENSION SHALL BE 30 BAR DIAMETERS, UNLESS OTHERWISE NOTED.
3. CUT EXISTING REINFORCEMENT TO THE REQUIRED BAR EXTENSION.
4. IF IT WILL NOT DAMAGE THE CONCRETE TO BE LEFT IN PLACE, THE REMAINING CONCRETE MAY BE REMOVED BY ANY SUITABLE METHOD UPON APPROVAL OF THE ENGINEER WHO SHALL BE THE SOLE JUDGE OF THE USE OF ANY CONCRETE REMOVAL EQUIPMENT. HOWEVER, EXPLOSIVES OR A WRECKING BALL (OR OTHER SIMILAR DEVICE) WILL NOT BE PERMITTED.

INDEX TO STANDARD PLANS

LOS ANGELES COUNTY DEPARTMENT OF PUBLIC WORKS

STD PLAN	TITLE
3080-3	PIPE BEDDING IN TRENCHES
3090-1	CRITERIA FOR THE DESIGN OF SHORING FOR EXCAVATIONS
3091-1	SAMPLE SHEET FOR USE AS A GUIDE IN PREPARING CALCULATIONS FOR SHORING OF EXCAVATIONS
3093-1	UNIFIED SOIL CLASSIFICATION SYSTEM
6002-1	PORTABLE SECURITY FENCE FOR OPEN TRENCHES
6008-1	MINIMUM PUBLIC SAFETY REQUIREMENT FOR OPEN EXCAVATIONS

STANDARD PLANS FOR PUBLIC WORKS CONSTRUCTION (SPPWC), 2009 EDITION

STD PLAN	TITLE
120-2	CURB AND GUTTER - BARRIER
308-1	MONOLITHIC CATCH BASIN CONNECTION
331-3	JUNCTION STRUCTURE - PIPE TO PIPE INLET ID 24" OR OD > 1/2 MAIN LINE ID
361-2	TRASH RACK (INCLINED)
600-3	CHAIN LINK FENCE AND GATES
606-3	METAL HAND RAILINGS
610-3	REINFORCED CONCRETE RETAINING WALL TYPE 1

STATE OF CALIFORNIA DEPARTMENT OF TRANSPORTATION (CALTRANS) STANDARD PLANS, 2010 EDITION

STD PLAN	TITLE
D89	PIPE CULVERT HEADWALLS STRAIGHT AND "L"

PD052610

DRAFTER	DESIGNER	CHECKER	CADD PROJECT FILE NAME	REVIEWED BY	DATE
T. NGUYEN	T. NGUYEN	JI NG	FCC0001236.dgn		7/24/14

DATE	MK	DESCRIPTION

REVISIONS

REGISTERED PROFESSIONAL ENGINEER THUAN D NGUYEN No. 79096 CIVIL STATE OF CALIFORNIA

PROJECT ENGINEER 7/24/2014 DATE

COUNTY OF LOS ANGELES DEPARTMENT OF PUBLIC WORKS

PD T1203
DRAINAGE EXTENSION

GENERAL NOTES AND
INDEX TO STANDARD PLANS

FCC0001236	JOBEF11212156	DWG 313-D2.2	SHEET 2 OF 7

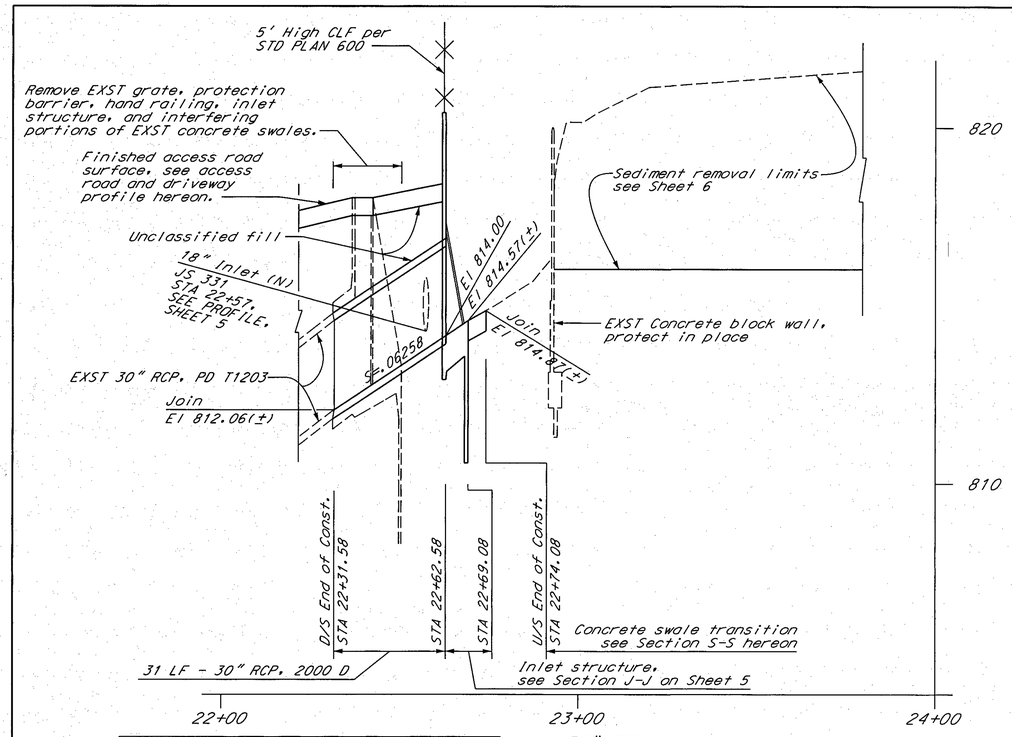

30" RCP
PROFILE
SCALE: HOR. 1"= 20' VERT. 1"= 2'

JS 331					
STATION	A	B	C	D	El S
22+57	77°36'35"	18"	18"	30"	ENTER RADIALLY

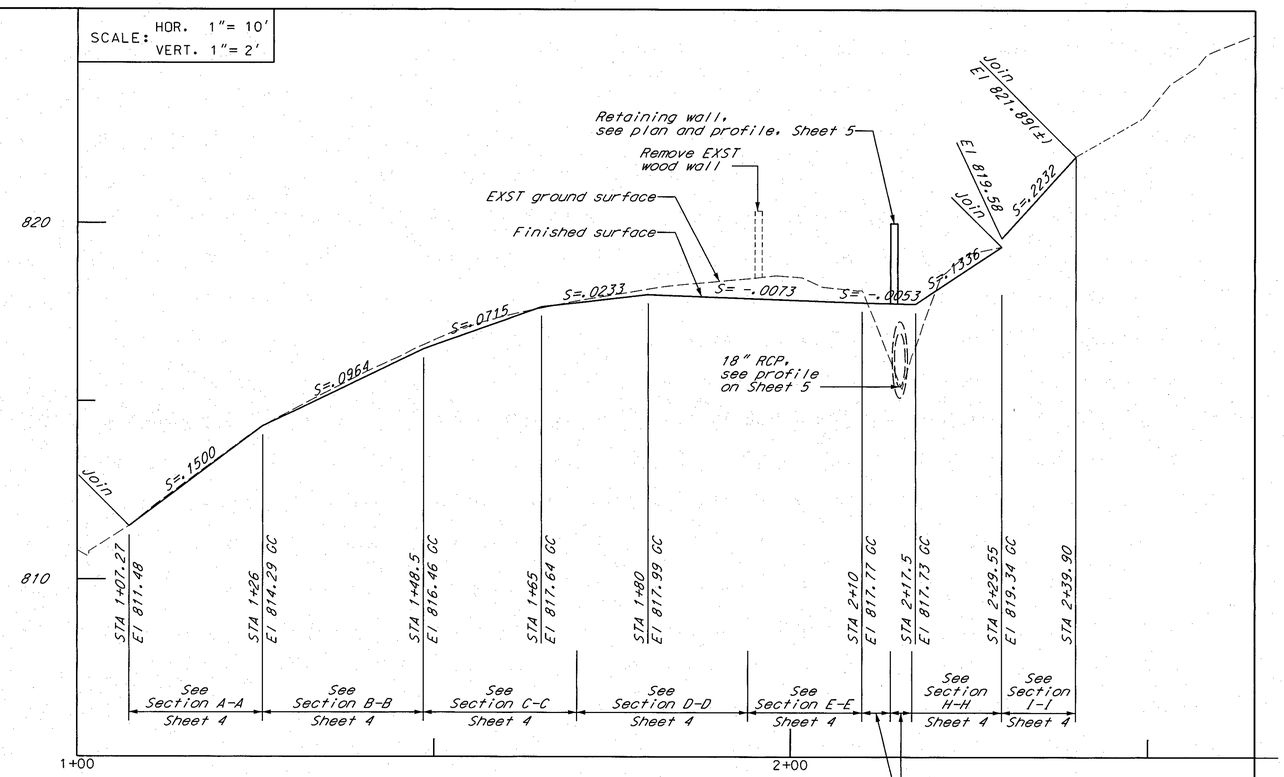

ACCESS ROAD AND DRIVEWAY ALONG CONTROL LINE
PROFILE

POINT	COORDINATES	STATION
Ⓐ	N 1,814,725.09 E 6,607,604.87	STA. 2+29.55, Access road control line
Ⓑ	N 1,814,728.83 E 6,607,589.46	STA. 2+39.90, Access road end

	ACCESS ROAD AND DRIVEWAY CONTROL LINE CURVE DATA							
	DELTA	R	T	L	BC	EC	PI	
							Northing	Easting
Δ_1	10°13'31"	200.00'	17.89'	35.69'	1+38.08	1+73.77	1814672.46	6607655.50

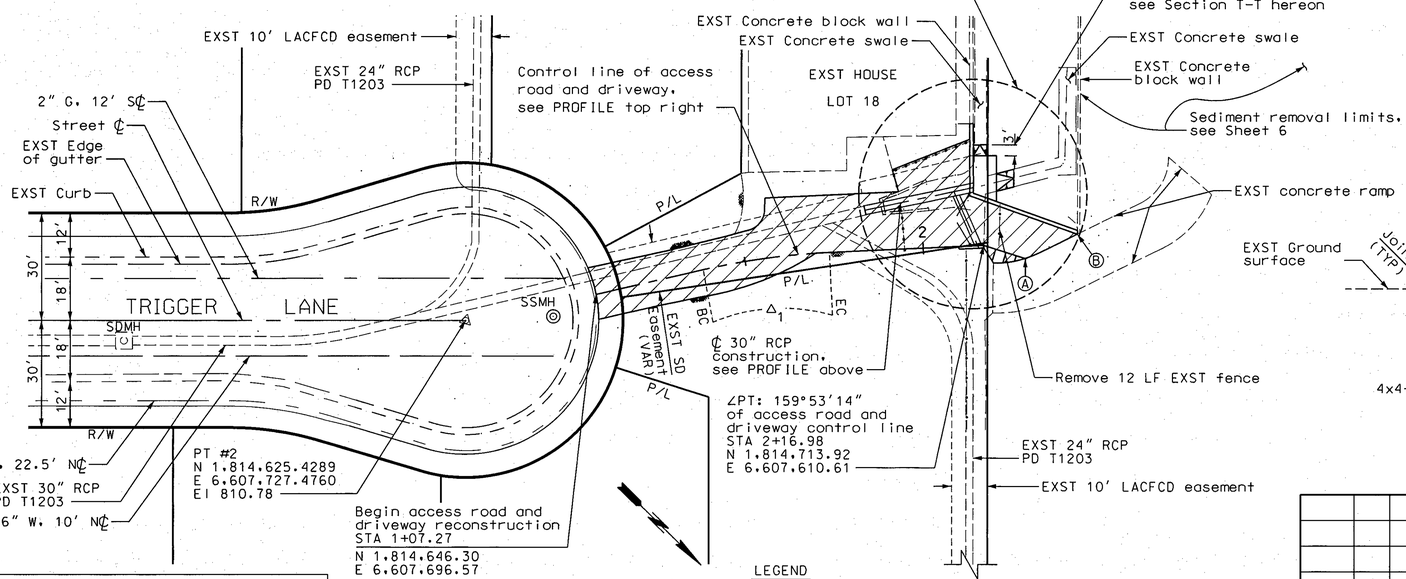

BENCHMARK: PT#2
NAVD 88 (OTTERBEIN 2005) El. 810.78
SPK & RCE 11349 W. ON 2" @ CUL DE SAC OF TRIGGER LN. ±334' NWLY OF ℄ INT. SUTTERS MILL RD. & TRIGGER LN.

PLAN
SCALE: 1" = 20'
20 0 20 40

LEGEND
Remove and reconstruct access road and driveway

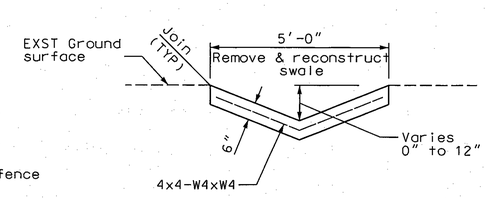

SECTION S-S
NOT TO SCALE

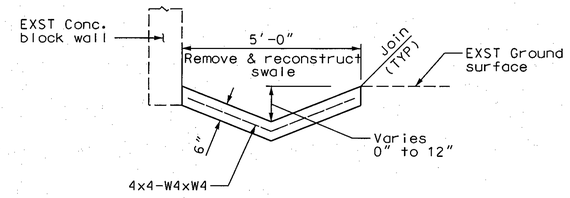

SECTION T-T
NOT TO SCALE

PD052610

DATE	MK	DESCRIPTION

REVISIONS

REGISTERED PROFESSIONAL ENGINEER THUAN D NGUYEN No. 79096 CIVIL STATE OF CALIFORNIA
PROJECT ENGINEER 7/24/2014 DATE

COUNTY OF LOS ANGELES DEPARTMENT OF PUBLIC WORKS

PD T1203
DRAINAGE EXTENSION

PLAN AND PROFILES
STA 22+31.58 TO STA 22+69.08 (CLOSED CONDUIT)
STA 1+07 TO STA 2+40
(ACCESS ROAD & DRIVEWAY RECONSTRUCTION)

FCC0001236 | JOBEF11212156 | DWG 313-D2.3 | SHEET 3 OF 7

DRAFTER T. NGUYEN | DESIGNER T. NGUYEN | CHECKER J. NG | CADD PROJECT FILE NAME FCC0001236.dgn | REVIEWED | DATE 7/24/14

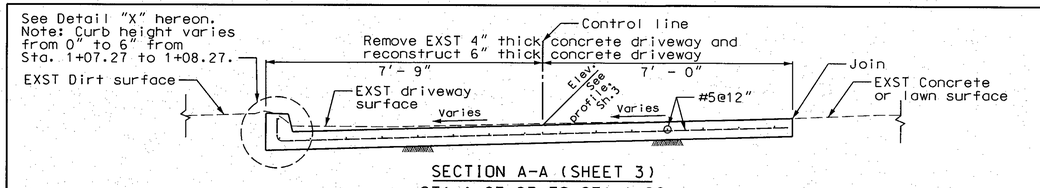

SECTION A-A (SHEET 3)
STA 1+07.27 TO STA 1+26
NOT TO SCALE

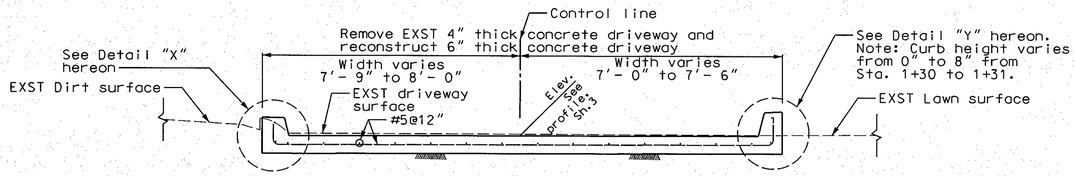

SECTION B-B (SHEET 3)
DRIVEWAY SUPER ELEVATION TRANSITION
STA 1+26 (2% SLOPE NORTH TO SOUTH) TO STA 1+48.5 (2% SLOPE SOUTH TO NORTH)
NOT TO SCALE

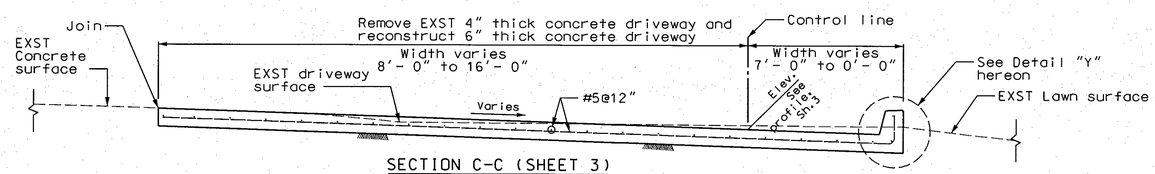

SECTION C-C (SHEET 3)
STA 1+48.5 TO STA 1+70
NOT TO SCALE

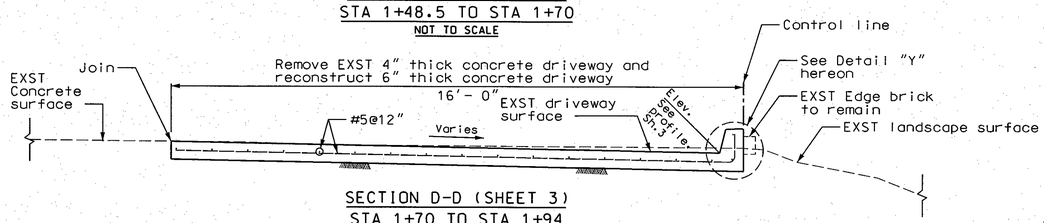

SECTION D-D (SHEET 3)
STA 1+70 TO STA 1+94
NOT TO SCALE

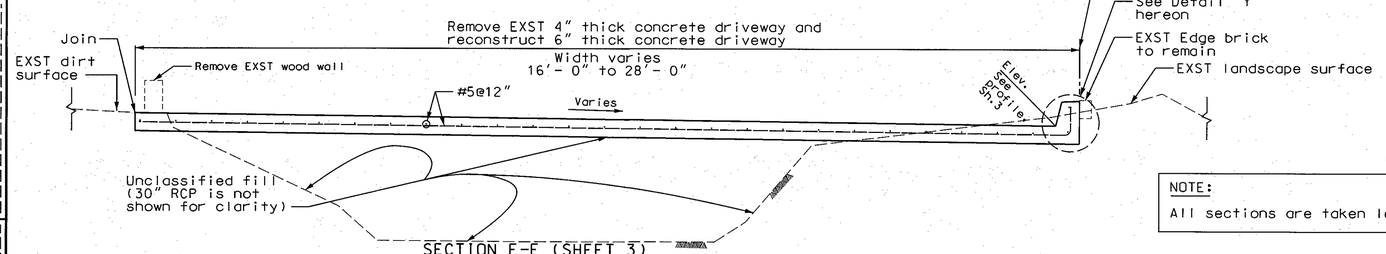

SECTION E-E (SHEET 3)
STA 1+94 TO STA 2+10
NOT TO SCALE

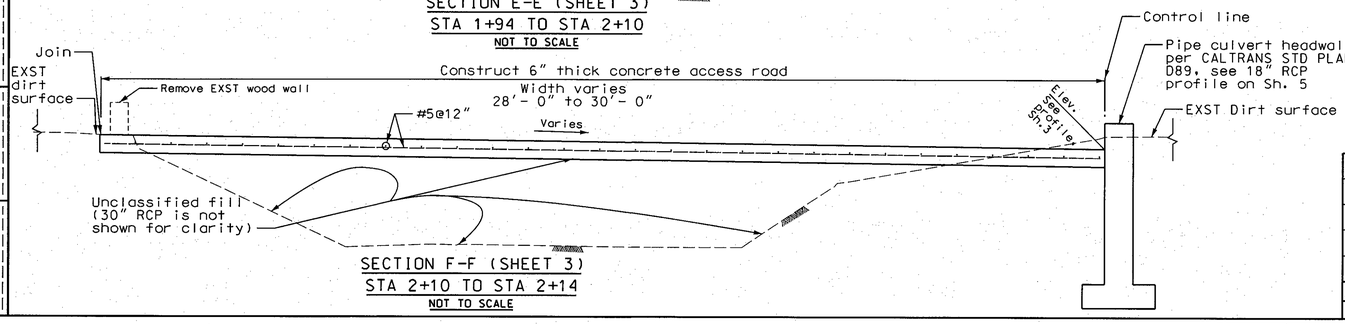

SECTION F-F (SHEET 3)
STA 2+10 TO STA 2+14
NOT TO SCALE

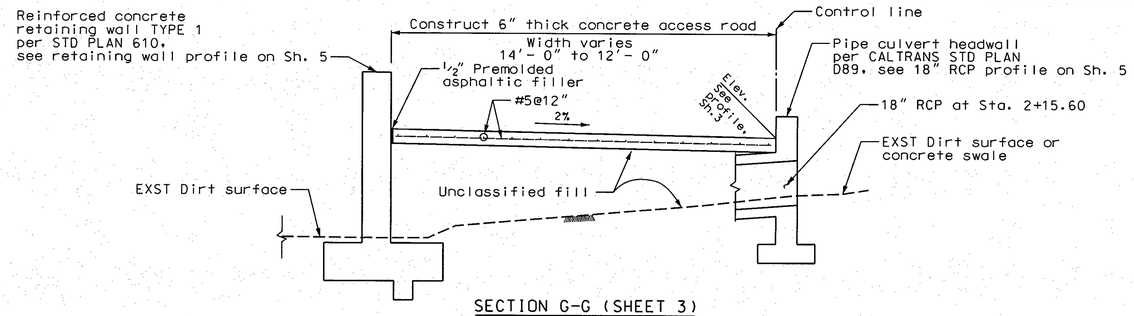

SECTION G-G (SHEET 3)
STA 2+14 TO STA 2+17
NOT TO SCALE

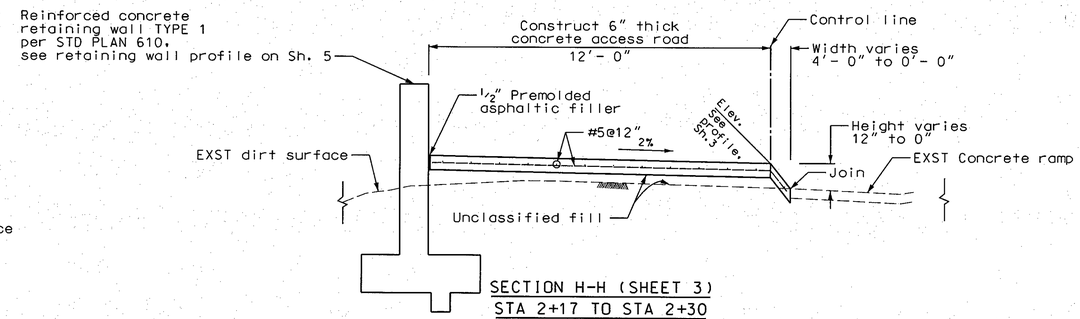

SECTION H-H (SHEET 3)
STA 2+17 TO STA 2+30
NOT TO SCALE

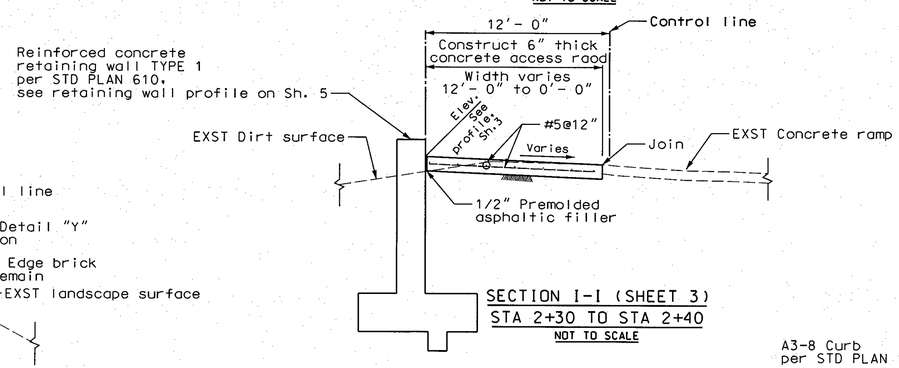

SECTION I-I (SHEET 3)
STA 2+30 TO STA 2+40
NOT TO SCALE

NOTE:
All sections are taken looking upstream.

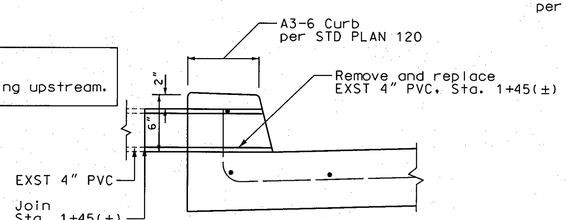

DETAIL "X"
NOT TO SCALE

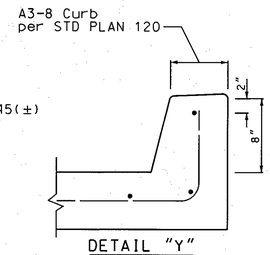

DETAIL "Y"
NOT TO SCALE

PD052610

DATE	MK	DESCRIPTION

REVISIONS

REGISTERED PROFESSIONAL ENGINEER THUAN D NGUYEN No. 79096 CIVIL STATE OF CALIFORNIA

PROJECT ENGINEER DATE

COUNTY OF LOS ANGELES DEPARTMENT OF PUBLIC WORKS

PD T1203
DRAINAGE EXTENSION

ACCESS ROAD AND DRIVEWAY CROSS SECTIONS

FCC0001236 | JOB EF11212156 | DWG 313-D2.4 | SHEET 4 OF 7

DRAFTER T. NGUYEN
DESIGNER T. NGUYEN
CHECKER J. NG
CADD PROJECT FILE NAME FCC0001236.dgn
REVIEWED BY 7/20/14
DATE

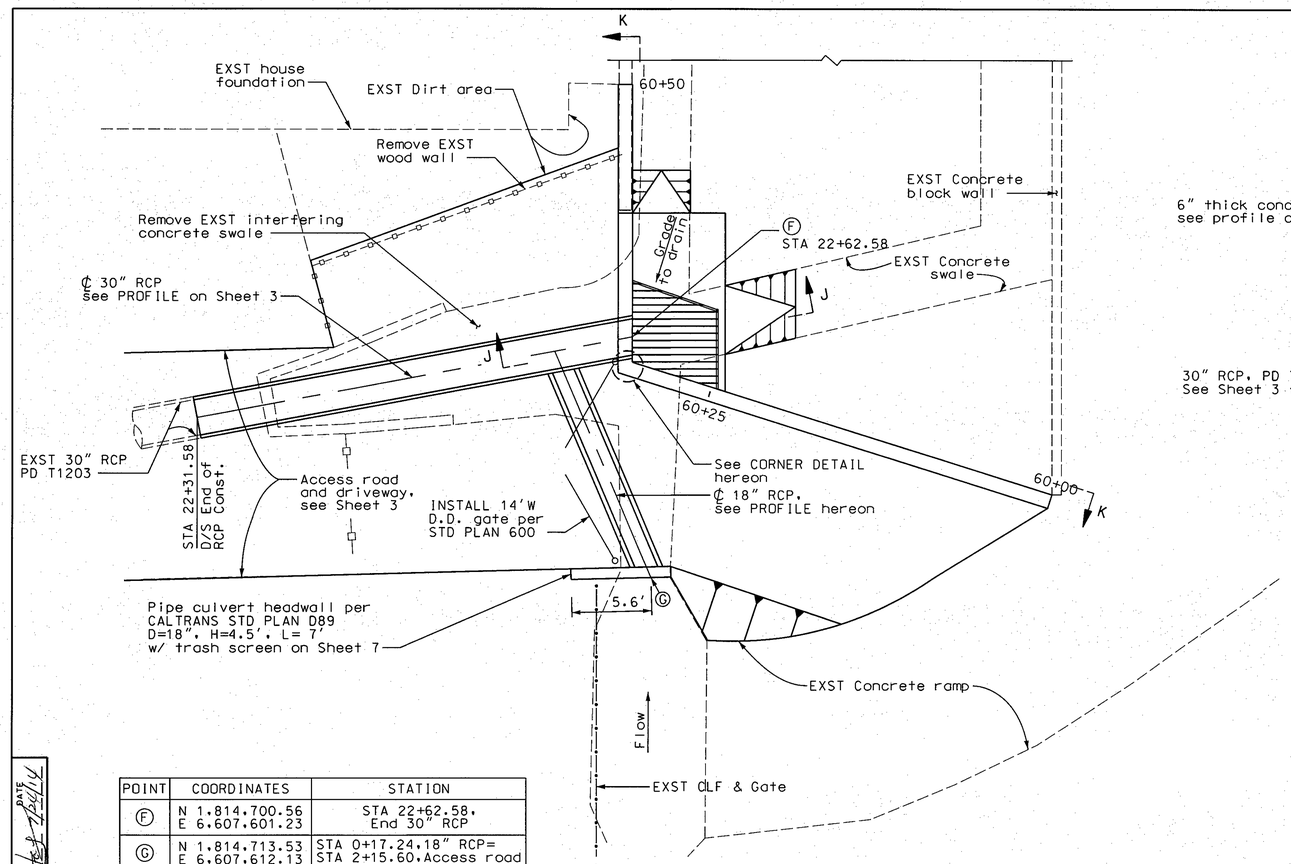

POINT	COORDINATES	STATION
Ⓕ	N 1,814,700.56 E 6,607,601.23	STA 22+62.58, End 30" RCP
Ⓖ	N 1,814,713.53 E 6,607,612.13	STA 0+17.24,18" RCP= STA 2+15.60,Access road

PD T1203 EXTENSION
PLAN
SCALE: 1"=5'

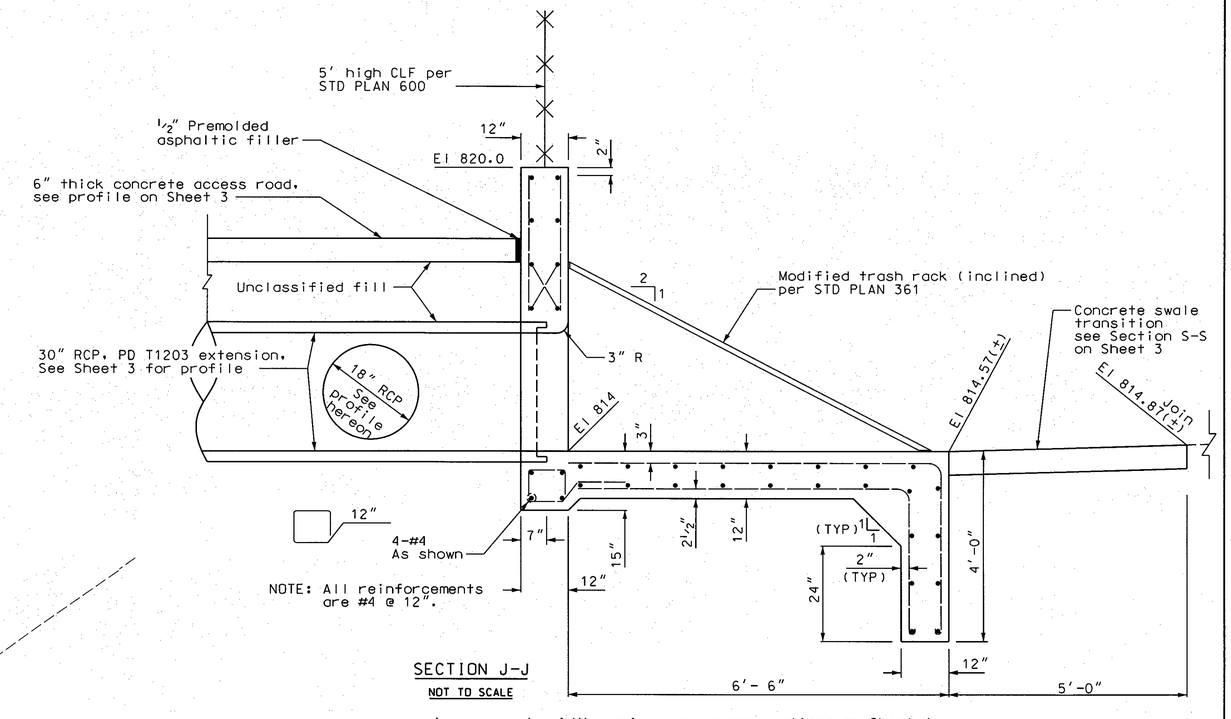

SECTION J-J
NOT TO SCALE

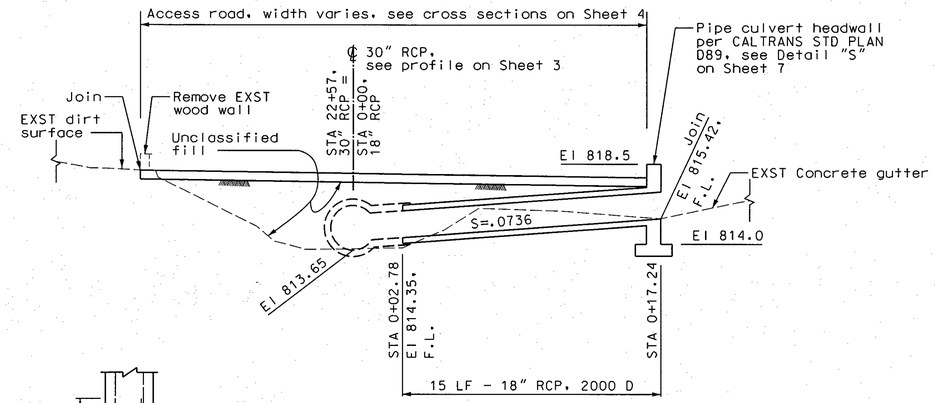

18" RCP PROFILE
SCALE 1"= 4'

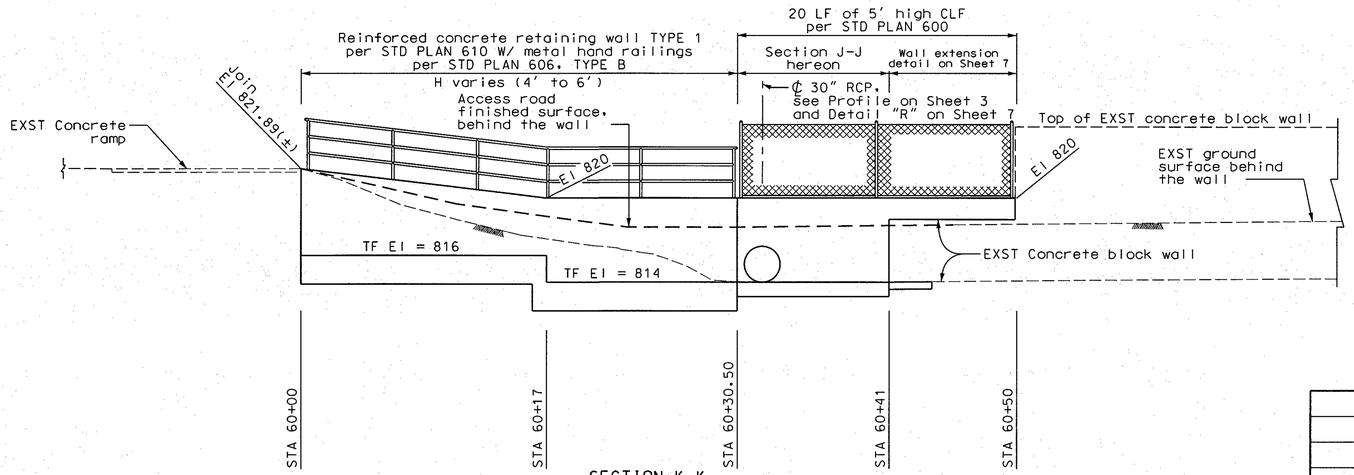

SECTION K-K
RETAINING WALL PROFILE
SCALE 1"= 5'

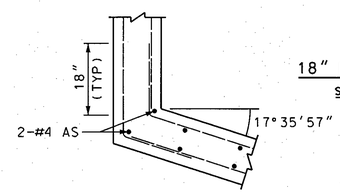

CORNER DETAIL
NOT TO SCALE

PD052610

DATE	MK	DESCRIPTION

REVISIONS

REGISTERED PROFESSIONAL ENGINEER THUAN D NGUYEN No. 79096 CIVIL STATE OF CALIFORNIA

PROJECT ENGINEER DATE

COUNTY OF LOS ANGELES DEPARTMENT OF PUBLIC WORKS

PD T1203
DRAINAGE EXTENSION

RETAINING WALL AND 18" RCP PROFILE
INLET STRUCTURE DETAIL

FCC0001236 | JOB EF11212156 | DWG 313-D2.5 | SHEET 5 OF 7

DRAFTER T. NGUYEN
DESIGNER T. NGUYEN
CHECKER J. NG
CADD PROJECT FILE NAME FCC0001236.dgn
REVIEWED BY
DATE

BENCHMARK: PT#2
NAVD 88 (OTTERBEIN 2005) El. 810.78
SPK & RCE 11349 W. DN 2" @ CUL DE SAC
OF TRIGGER LN. ±334' NWLY OF ℄ INT.
SUTTERS MILL RD. & TRIGGER LN.

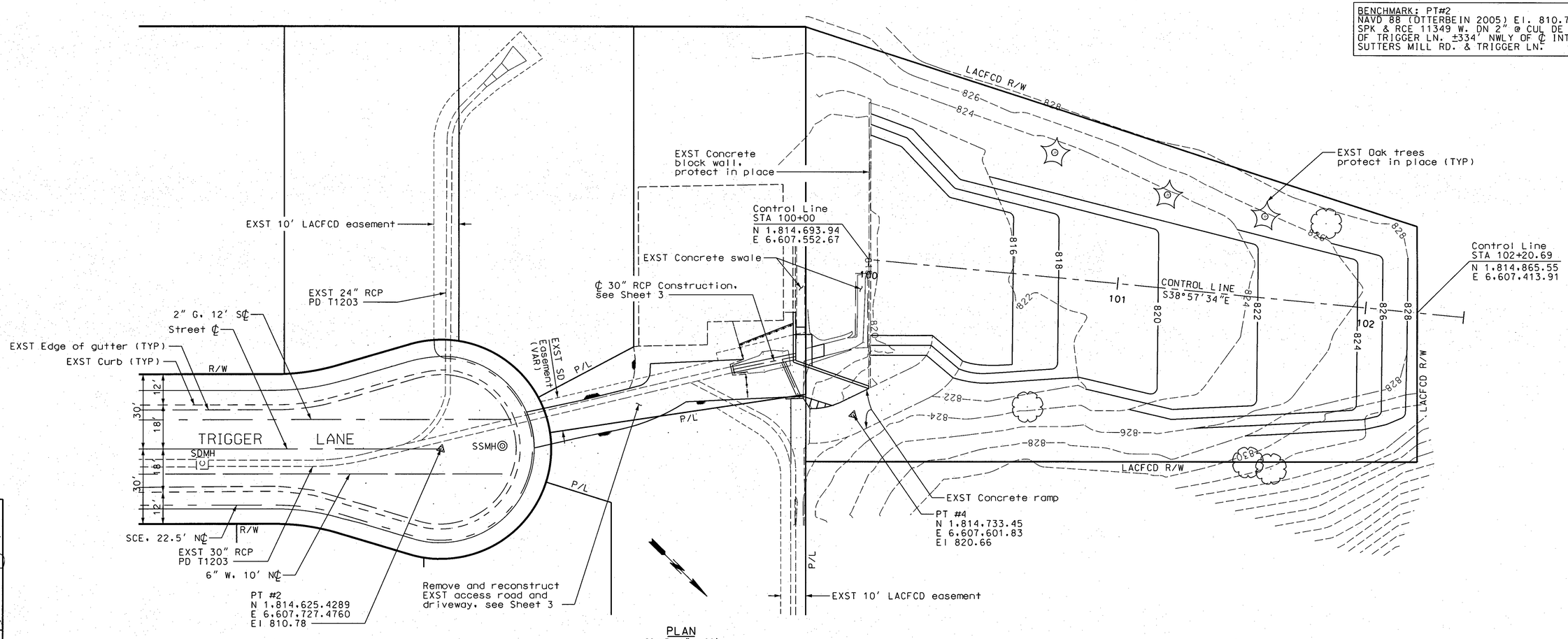

PLAN
SCALE: 1" = 20'

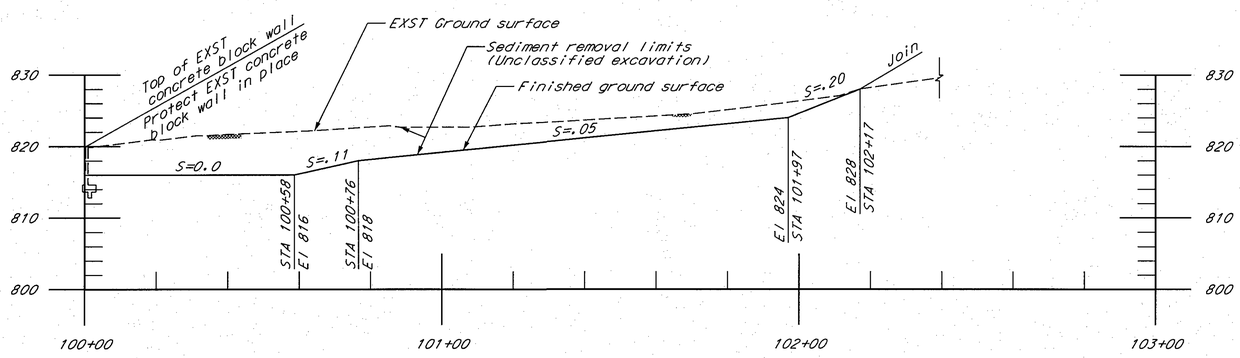

PROFILE (CONTROL LINE)
SCALE: HOR. 1"=20'
VERT. 1"=10'

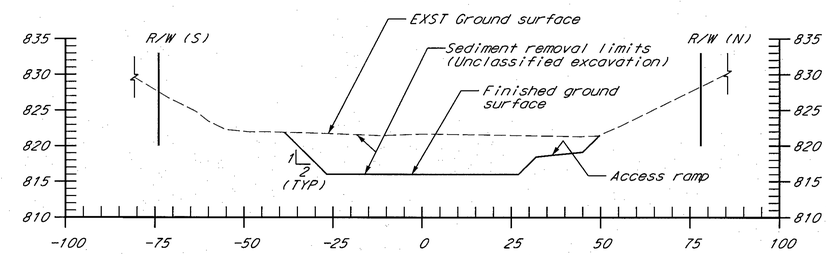

STA 100+39
CROSS SECTION
SCALE: HOR. 1"=20'
VERT. 1"=10'

PD052610

CUT VOLUME = 2,100 CY

DATE	MK	DESCRIPTION

REVISIONS

REGISTERED PROFESSIONAL ENGINEER THUAN D NGUYEN No. 79096 CIVIL STATE OF CALIFORNIA

PROJECT ENGINEER DATE 7/24/2014

COUNTY OF LOS ANGELES DEPARTMENT OF PUBLIC WORKS

PD T1203
DRAINAGE EXTENSION

SEDIMENT CLEANOUT
PLAN, PROFILE, AND CROSS SECTION
STA 100+00 TO STA 102+17

FCC0001236 | JOBEF11212156 | DWG 313-D2.6 | SHEET 6 OF 7

DRAFTER T. NGUYEN
DESIGNER T. NGUYEN
CHECKER J. NG
CADD PROJECT FILE NAME FCC0001236.dgn
REVIEWED 8/27/14 Supervising Civil Engineer

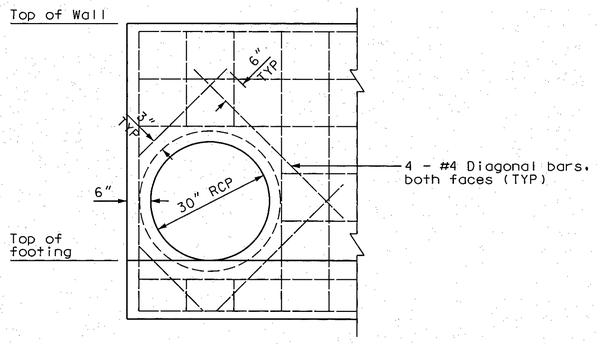

DETAIL "R" (SHEET 5)

NOT TO SCALE

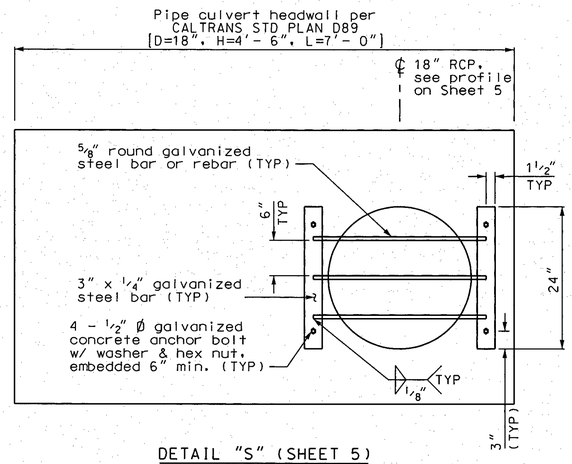

DETAIL "S" (SHEET 5)

NOT TO SCALE

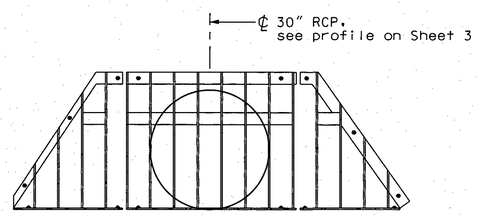

MODIFIED TRASH RACK (INCLINED) (SHEET 5)

FRONT VIEW

NOT TO SCALE

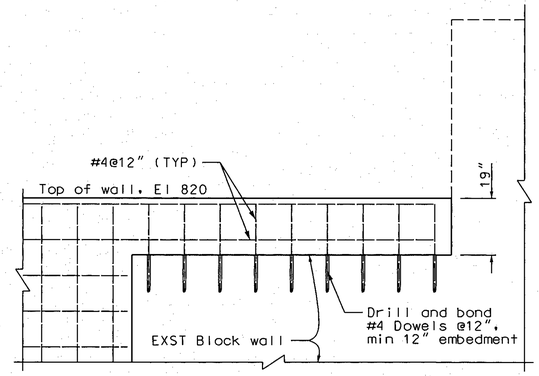

WALL EXTENSION DETAIL (SHEET 5)

NOT TO SCALE

PD052610

DATE	MK	DESCRIPTION

REVISIONS

REGISTERED PROFESSIONAL ENGINEER THUAN D NGUYEN No. 79096 CIVIL STATE OF CALIFORNIA

PROJECT ENGINEER DATE

COUNTY OF LOS ANGELES DEPARTMENT OF PUBLIC WORKS

PD T1203

DRAINAGE EXTENSION

INLET STRUCTURAL DETAILS

FCC0001236 | JOB EF11212156 | DWG 313-D2.7 | SHEET 7 OF 7

DRAFTER T. NGUYEN | DESIGNER T. NGUYEN | CHECKER J. NG | CADD PROJECT FILE NAME FCC0001236.dgn | REVIEWED BY | DATE