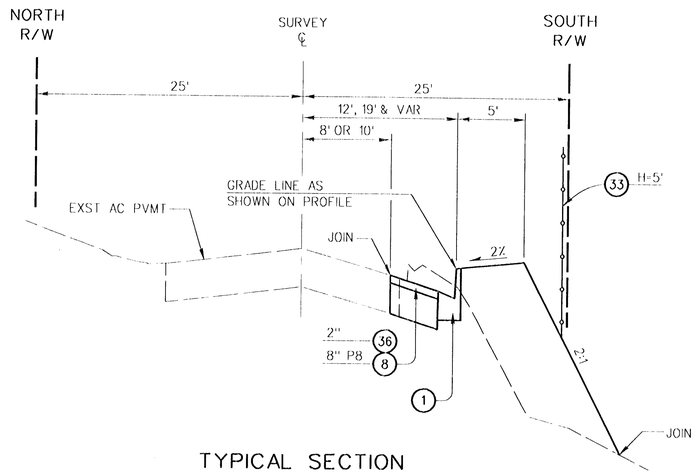

TYPICAL SECTION
SIERRA MADRE AVENUE
STA 96+20 TO STA 99+62.56
NOT TO SCALE

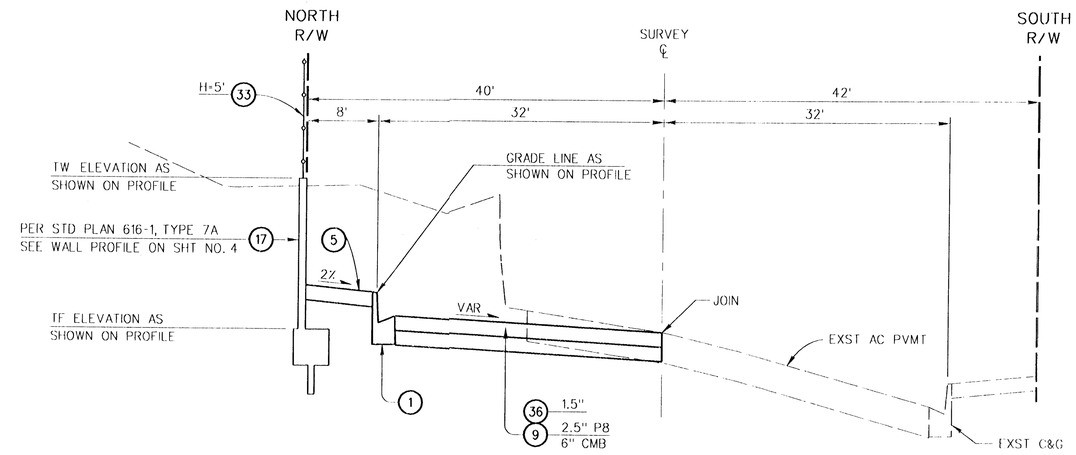

TYPICAL SECTION
SIERRA MADRE AVENUE
STA 101+51.12 TO STA 108+08.20
NOT TO SCALE

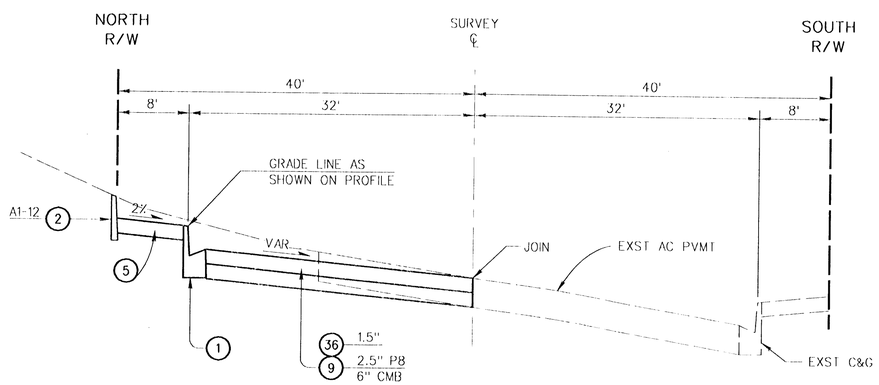

TYPICAL SECTION
SIERRA MADRE AVENUE
STA 99+90.50 TO STA 101+07.12
NOT TO SCALE

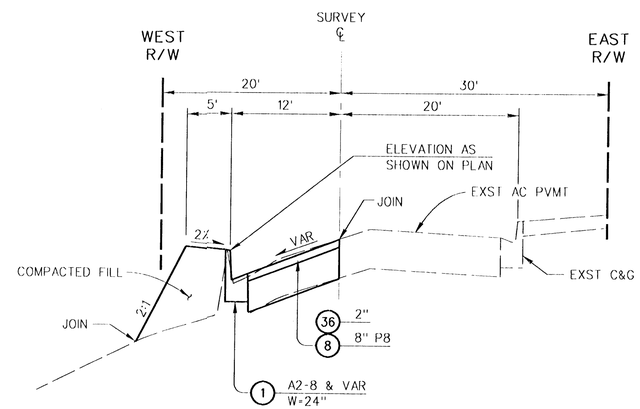

TYPICAL SECTION
BARRANCA AVENUE
STA 9+00 TO STA 9+55.63
NOT TO SCALE

PH073607

DATE	MK	DESCRIPTION

REVISIONS

REGISTERED PROFESSIONAL ENGINEER
THOMAS HO
NO. C60649
EXP. 12/31/04
CIVIL
STATE OF CALIFORNIA

Thomas Ho 1/31/03
PROJECT ENGINEER DATE

COUNTY OF LOS ANGELES DEPARTMENT OF PUBLIC WORKS

SIERRA MADRE AVENUE

AT BARRANCA AVENUE

PROJECT ID NO. RDC0014259

JOB X2509771 | DWG PH073607 | SHEET 3 OF 6

PS-DH 10/00

DRAFTER L. TO/ T. HO
DESIGNER L. TO/T. HO
CHECKER DAN QUINTANA
CADD PROJECT FILE NAME RDC0014259_LAYOUT
REVIEWED BY
DATE