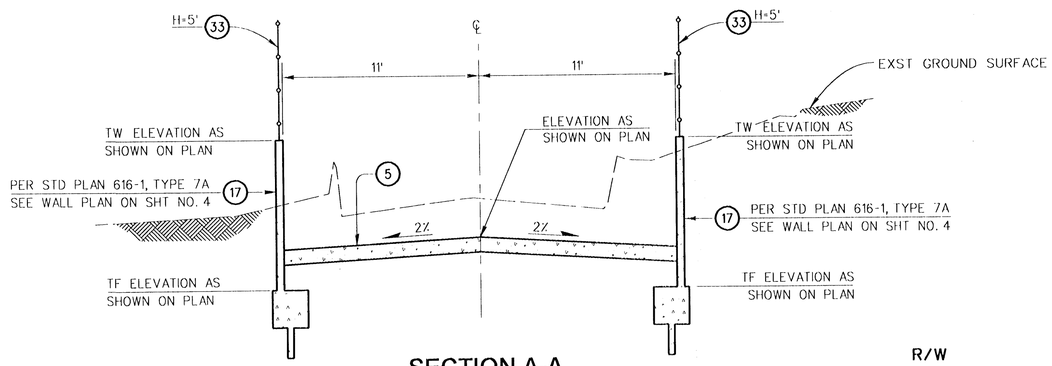

SECTION A-A
NOT TO SCALE

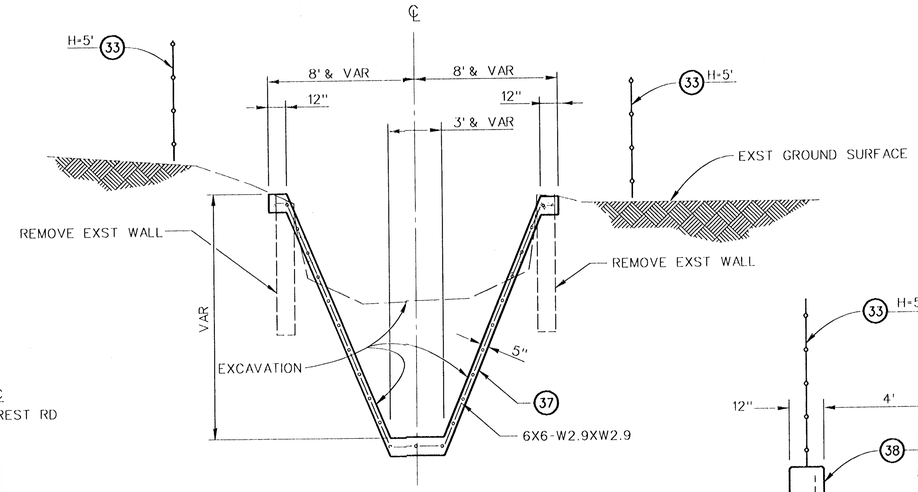

SECTION C-C
NOT TO SCALE

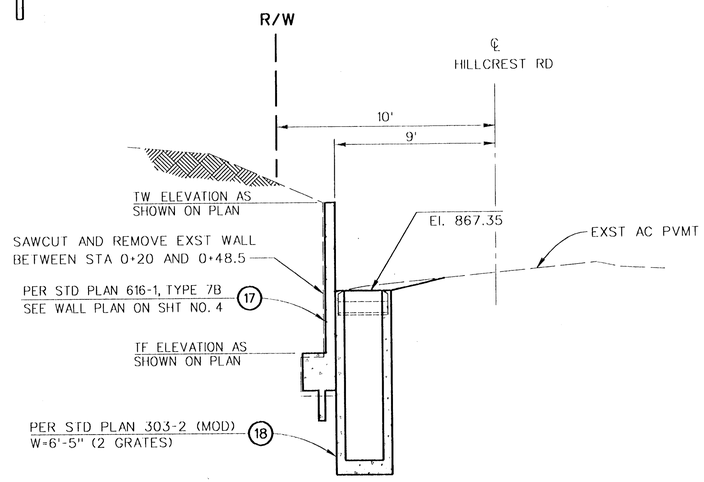

SECTION D-D
NOT TO SCALE

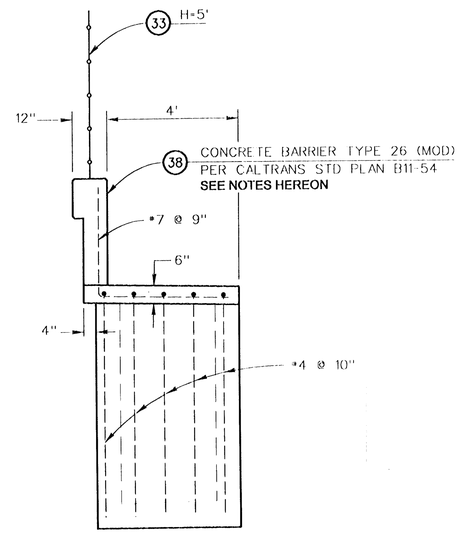

DETAIL C
SIDE WALLS OF CATCH BASIN
NOT TO SCALE

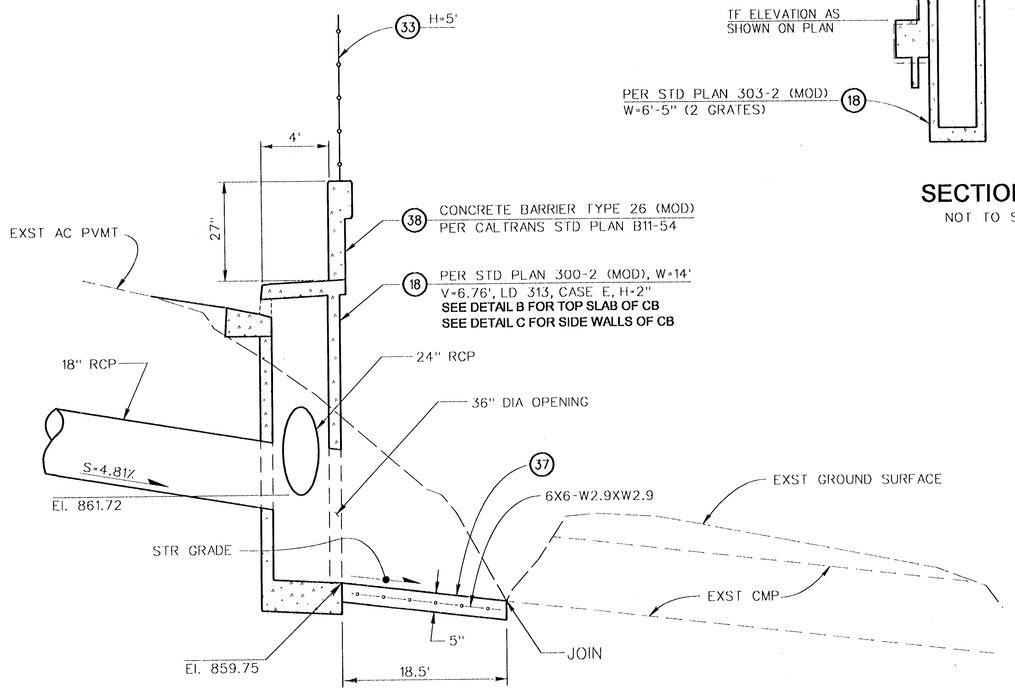

SECTION B-B
NOT TO SCALE

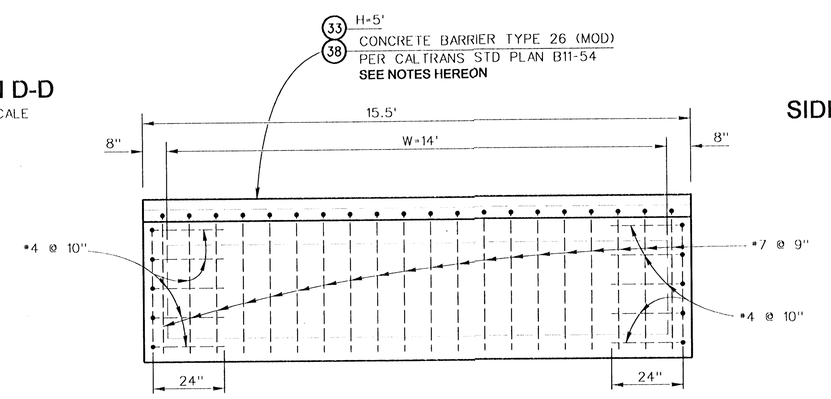

DETAIL B
TOP SLAB OF CATCH BASIN
NOT TO SCALE

"PH073610"

NOTES:

1. ALL SHOWN REINFORCEMENT IS IN ADDITION TO REINFORCEMENT SHOWN ON STD. PLAN
2. RELOCATE MANHOLE COVER SO THAT IT DOES NOT INTERFERE WITH #4@10 DEVELOPMENT LENGTH

DATE	MK	DESCRIPTION

REVISIONS

REGISTERED PROFESSIONAL ENGINEER — THOMAS HO — NO. C60649 — EXP. 12/31/04 — CIVIL — STATE OF CALIFORNIA

Thomas Ho 7/31/03
PROJECT ENGINEER — DATE

COUNTY OF LOS ANGELES DEPARTMENT OF PUBLIC WORKS

SIERRA MADRE AVENUE
AT BARRANCA AVENUE
PROJECT ID NO. RDC0014259

JOB X2509771 | DWG PH073610 | SHEET 6 OF 6

PPS DH 10/00

DRAFTER THOMAS HO | DESIGNER TH/ TS | CHECKER DAN QUINTANA | CADD PROJECT FILE NAME RDC0014259.DRAINAGE | REVIEWED BY | DATE 7-31-03