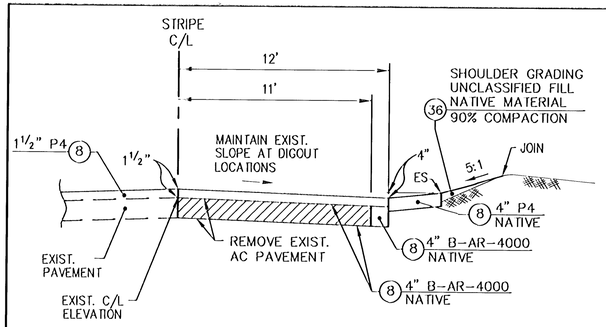

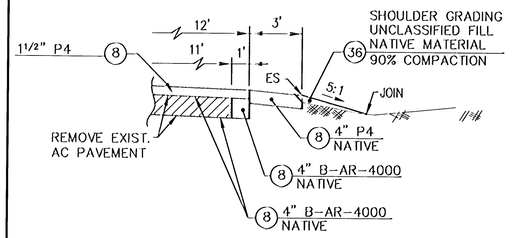

SECTION A-A

NOT TO SCALE

TABLE 1

DIGOUT LOCATIONS			
DIGOUT	DIMENSIONS (FT) W X L	SIDE	APPROX DISTANCE "X" FROM NEAREST M.M. (FT)
1	11 X 45	NORTH	238' E/O M.M B873
2	11 X 635	NORTH	187' E/O M.M 17.56
3	11 X 70	NORTH	18' E/O M.M 18.50
4	11 X 88	NORTH	250' E/O M.M 18.50
5	11 X 135	NORTH	406' E/O M.M 18.50
6	11 X 190	NORTH	@ M.M 18.63
7	11 X 92	NORTH	674' W/O M.M 18.63
8	11 X 96	NORTH	629' W/O M.M 18.63
9	11 X 80	SOUTH	533' W/O M.M 18.63
10	11 X 120	SOUTH	135' W/O M.M 18.63
11	11 X 635	NORTH	@ B904
12	11 X 200	NORTH	530' W/O M.M 19.25
13	11 X 50	NORTH	773' W/O M.M 19.25

TABLE 2

TURNOUTS - NEW & EXISTING				
TURNOUT	DIMENSIONS (FT) W X L	SIDE	APPROX DISTANCE FROM NEAREST M.M. (FT)	CONDITION
1	10 X 300	SOUTH	30' W/O M.M 15.24	EXISTING **
2	10 X 300	SOUTH	535' W/O M.M 16.14	NEW
3	10 X 300	SOUTH	1320' E/O M.M 16.80	EXISTING **
4	10 X 250	SOUTH	300' E/O M.M 19.97	NEW
5	10 X 250	NORTH	420' W/O M.M 18.46	EXISTING **

** NOTE: EXISTING TURNOUTS TO BE SURFACED WITH 1½"P4

TABLE 3

**** GUARDRAIL			
	34	**	35
LOCATION	LENGTH (FT)	LAYOUT TYPE	TERMINAL END SECTION TYPE (EA)
B910* NORTH (IDOT)	25.0	1A	SRT
B910* NORTH	25.0	1A	SRT
B910* SOUTH (IDOT)	12.5	1A	***(TYPE C)
B910* SOUTH	25.0	1A	SRT
B903* NORTH (IDOT)	37.5	1A	SRT
B903* NORTH	25.0	1A	SRT
B903* SOUTH (IDOT)	0		
B903* SOUTH	0		
B873* NORTH (IDOT)	0		
B873* NORTH	25.0	1A	SRT
B873* SOUTH (IDOT)	25.0	1A	ET
B873* SOUTH	25.0	1A	SRT
B904* NORTH (IDOT)	25.0	1A	ET
B904* NORTH	25.0	1A	SRT
B904* SOUTH (IDOT)	12.5	MODIFIED 1A	MODIFIED SRT
B904* SOUTH	25.0	1A	SRT

* BRIDGE NO., (IDOT) = IN DIRECTION OF TRAFFIC

** GUARD RAIL PER CALTRANS STD. PLAN A77A OR PER STD. PLAN A77D

*** TERMINAL SECTION (TYPE C) PER CALTRANS STD. PLAN A77K

**** NOTE: ALL REMOVED GUARDRAIL SHALL BE SALVAGED AND DISPOSED UNDER THE DIRECTION OF RESIDENT ENGNEER.

REVIEWED BY:
FARHAD AGAHI — DESIGN CONSULTANT SECTION — DATE 10/30/03

TABLE 4

COLD MILL AC BRIDGE	
DIMENSIONS (FT) L X W	* BRIDGE NO.
200 X 26	B910
350 X 26	B903
180 X 26	B873

* SEE KEY MAP, SHT. NO. 1

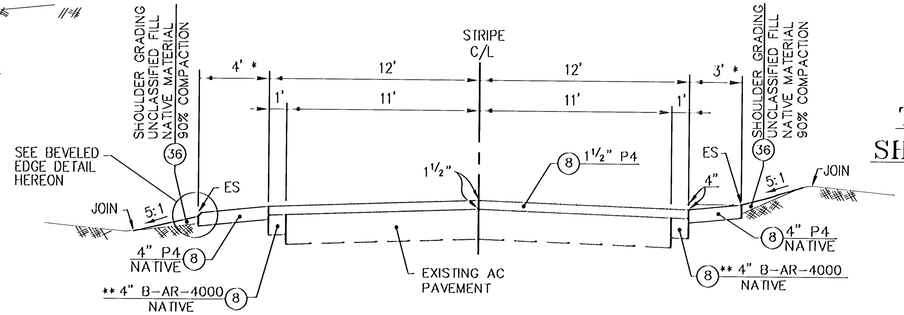

* MATCH EXISTING WIDTH WHERE EXISTING CONDITION DOES NOT ALLOW FOR THE DIMENSIONS AS SHOWN.

** TO BE UTILIZED FOR BOTH SIDES TO MATCH THE EXISTING CONDITION.

ES = EDGE OF SHOULDER

NOTE:
1. SEE TABLE 1 FOR ROADWAY DIGOUT LOCATIONS AND TYPICAL DIGOUT DETAIL HEREON.
2. SHOULDER PAVING SHALL MATCH EXISTING SLOPE OR INVERTED SHOULDER.

TYPICAL SECTION

NOT TO SCALE

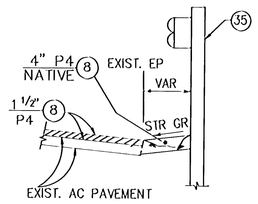

TYPICAL INVERTED SHOULDER AT GUARDRAIL

NOT TO SCALE

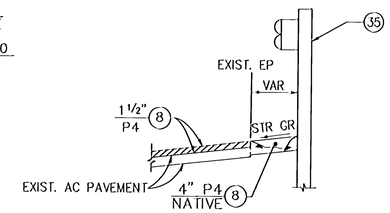

TYPICAL STD. SHOULDER AT GUARDRAIL

NOT TO SCALE

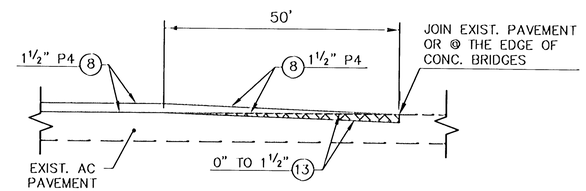

TYPICAL PAVEMENT JOIN LONGITUDINAL SECTION

NOT TO SCALE

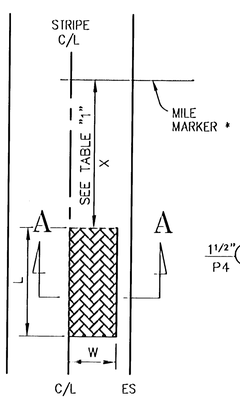

TYPICAL DIGOUT LOCATION DETAIL

NOT TO SCALE

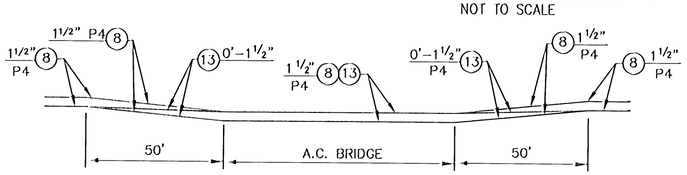

COLD MILL DETAIL AT BRIDGES

NOT TO SCALE

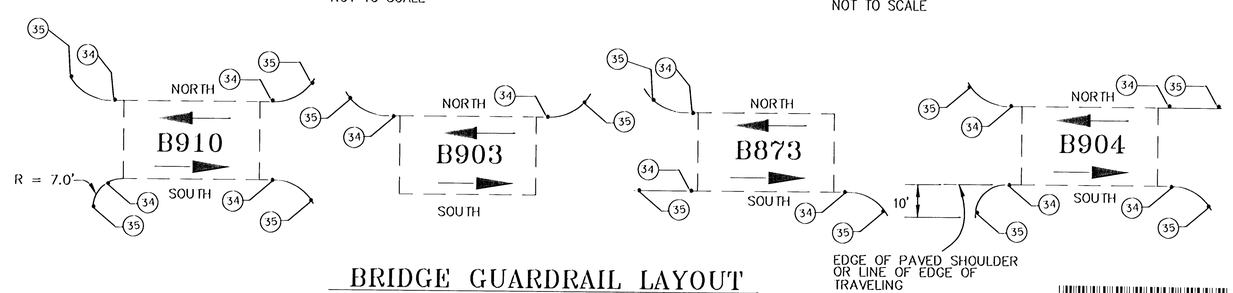

BRIDGE GUARDRAIL LAYOUT

NOT TO SCALE

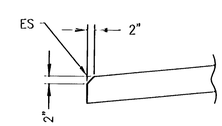

BEVELED EDGE DETAIL

NOT TO SCALE

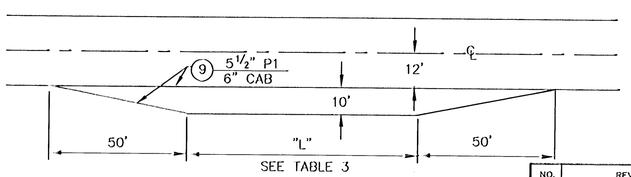

TYPICAL NEW TURNOUT DETAIL

NOT TO SCALE

NO.	REVISION	REVISED BY	APPROVED BY	DATE

Hall & Foreman, Inc.
Civil Engineering • Planning • Surveying • Public Works
203 N. Golden Circle Drive, Ste. 300 • Santa Ana, CA 92705-4010 • 714-664-0570
PREPARED UNDER THE SUPERVISION OF:
G. J. Baril — GERALD J. BARIL R.C.E. 16065 — DATE: 10/30/03

REGISTERED PROFESSIONAL ENGINEER GERALD J. BARIL 16065 EXPIRES 6/30/05 CIVIL STATE OF CALIFORNIA

COUNTY OF LOS ANGELES DEPARTMENT OF PUBLIC WORKS

SOLEDAD CANYON ROAD

TYPICAL SECTION & DETAILS
PROJECT ID NO. RDC0013983

DWG PCA NO. X2509670 — SHEET 3 OF 3

DRAFTER CONSULTANT | DESIGNER CONSULTANT | CHECKER CONSULTANT | CADD PROJECT FILE NAME | REVIEWED BY | DATE

Drawing Name: S:\02107-001\Eng\Final Plots\03_02107ST.dwg
Last Opened: Oct 29, 2003 - 11:40am by ZSaryeddean