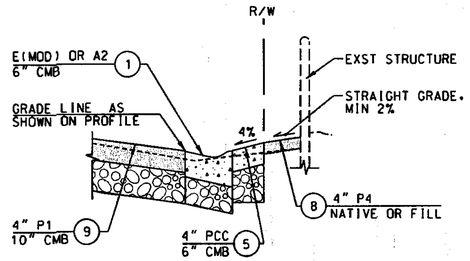

PARKWAY DETAIL 1
NO SCALE

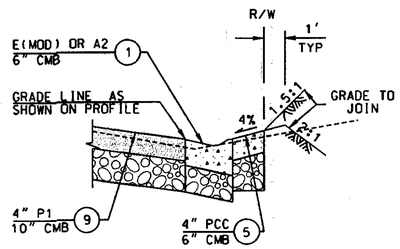

PARKWAY DETAIL 2
NO SCALE

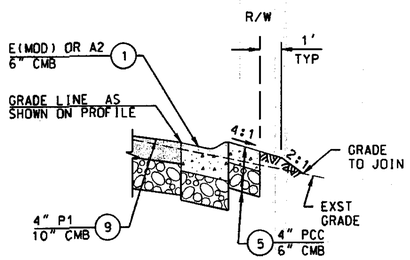

PARKWAY DETAIL 3
NO SCALE

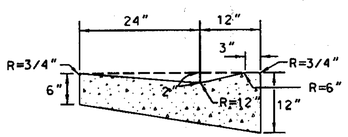

TYPE E (MOD), C&G
NO SCALE

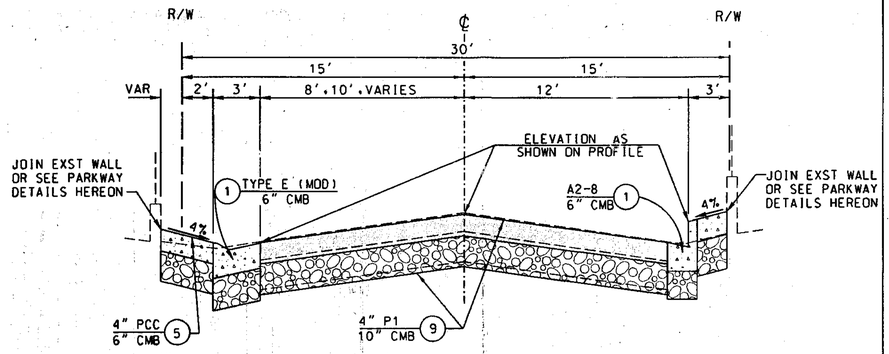

TYPICAL SECTION
HARRIS AVENUE
GAGE AVE TO HERBERT AVE
NO SCALE
EXISTING STRUCTURAL= 2.5" TO 6" OF AC PVMT ON NATIVE SOIL

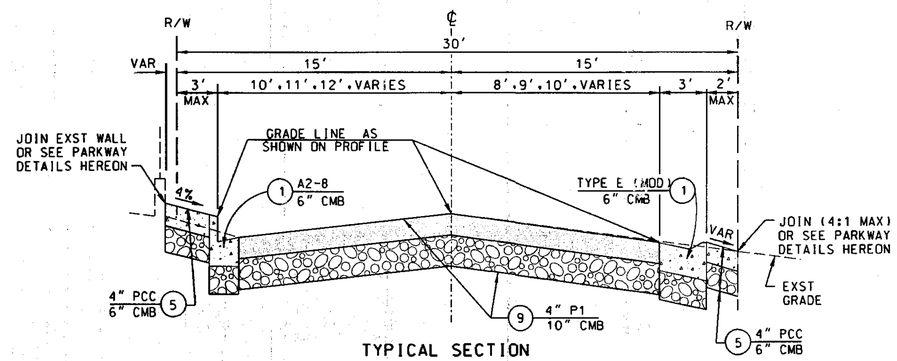

TYPICAL SECTION
COATES AVENUE
STRINGER AVE TO BOSTWICK AVE
NO SCALE
EXISTING STRUCTURAL= 3.25" TO 6" OF AC PVMT ON NATIVE SOIL

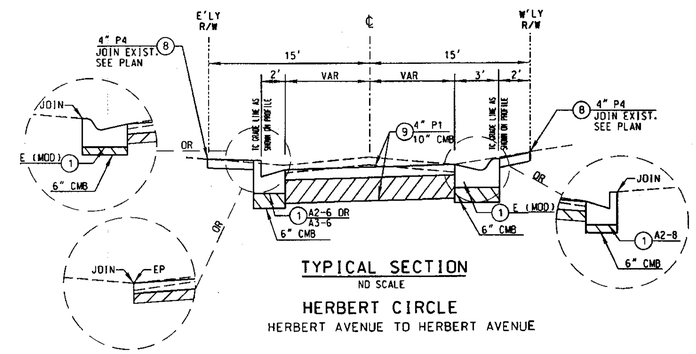

TYPICAL SECTION
NO SCALE
HERBERT CIRCLE
HERBERT AVENUE TO HERBERT AVENUE

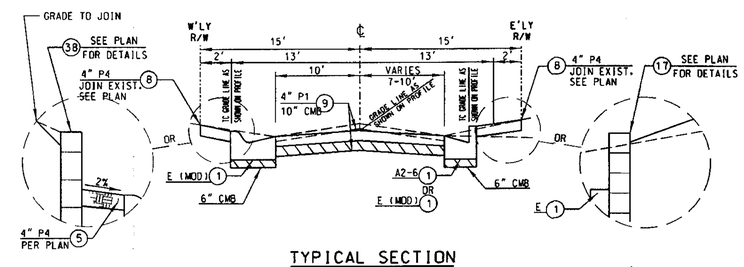

TYPICAL SECTION
NO SCALE
HERBERT AVENUE
STRINGER AVENUE TO HERBERT CIRCLE

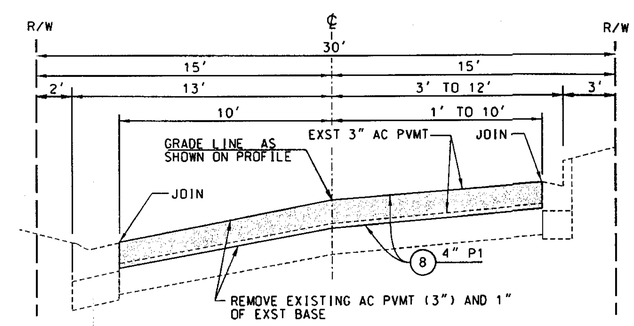

TYPICAL SECTION
BONNIE BEACH PLACE
NO SCALE

PH075576

DATE	MK	DESCRIPTION
8-15-12	■	AS BUILT REVISIONS

REVISIONS

REGISTERED PROFESSIONAL ENGINEER
R. SIAGIAN
NO. C67961
EXP. 06/30/11
CIVIL
STATE OF CALIFORNIA

8/26/10
PROJECT ENGINEER — DATE

COUNTY OF LOS ANGELES DEPARTMENT OF PUBLIC WORKS

HARRIS AVENUE, ET AL.

TYPICAL SECTIONS & DETAILS

PROJECT ID NO. RDC0011687

T.G. 635 - D4, E4, E3

17

RDC0011687	JOB X2101572	DWG PH075576	SHEET 3 OF 46

DRAFTER RS | DESIGNER RS | CHECKER W.LO | CADD PROJECT FILE NAME RDC0011687-HARRIS.DGN | REVIEWED BY | DATE

AS BUILT DRAWINGS