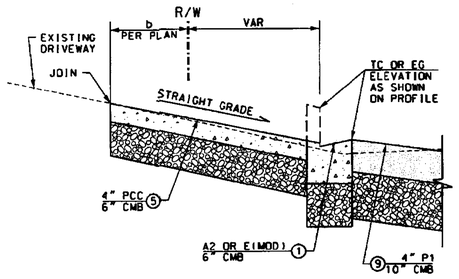

TYPICAL DRIVEWAY DETAIL A
NOT TO SCALE

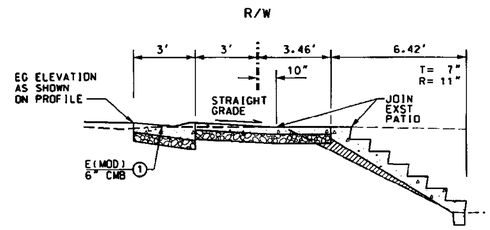

STEP DETAIL
STA 25+34 RIGHT
COATES AVENUE

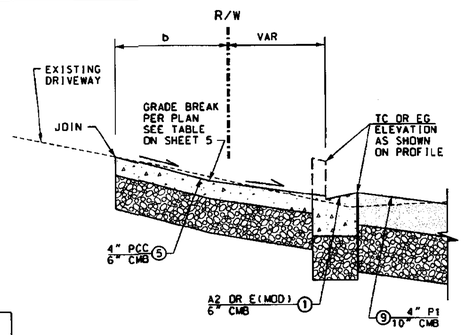

DRIVEWAY DETAIL B
NOT TO SCALE

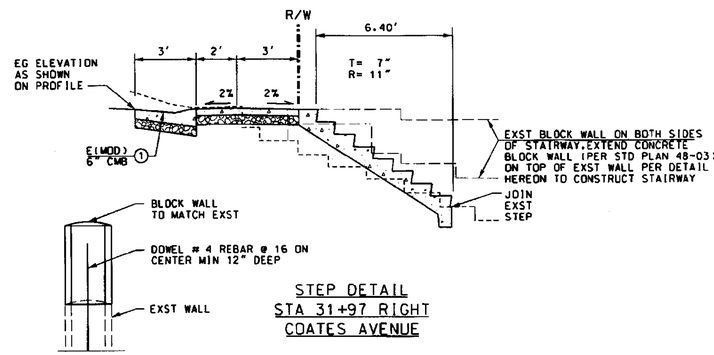

STEP DETAIL
STA 31+97 RIGHT
COATES AVENUE

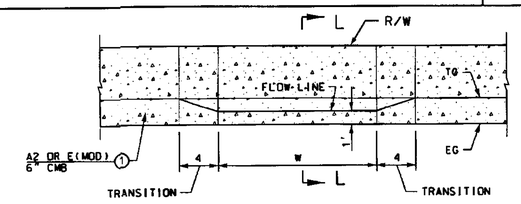

DRIVEWAY DETAIL C
NOT TO SCALE
PER PLAN & STA

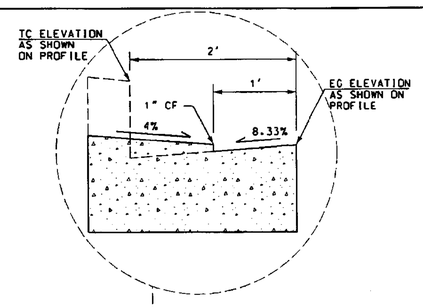

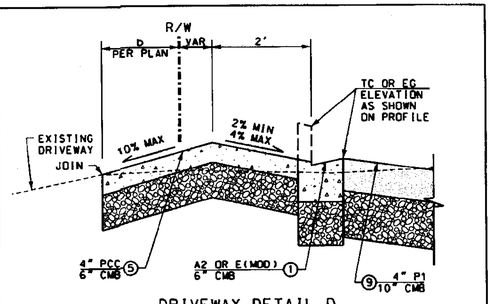

DRIVEWAY DETAIL D
NOT TO SCALE

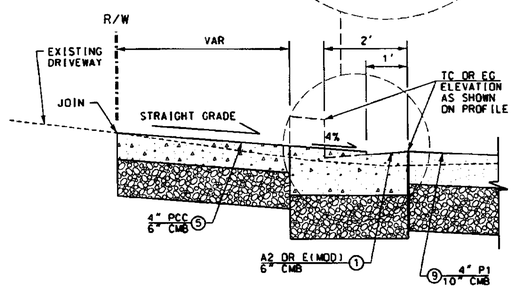

SECTION L-L
NOT TO SCALE

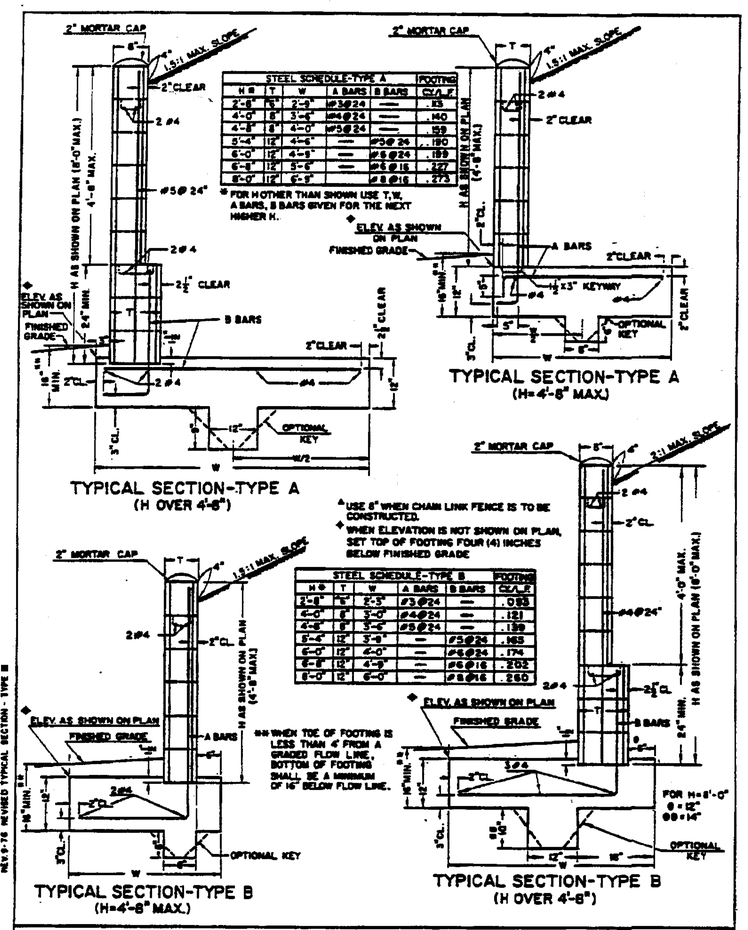

LOS ANGELES COUNTY ROAD DEPARTMENT

CONCRETE BLOCK RETAINING WALL

STANDARD PLAN
48-03
PAGE 1 OF 2 PAGES
REVISED 11-02

APPROVED _____ ROAD COMMISSIONER _____ DATE

WALL STANDARD DETAIL
NO SCALE

PH075584

DATE	MK	DESCRIPTION
8-15-12	■	AS BUILT REVISIONS

REVISIONS

REGISTERED PROFESSIONAL ENGINEER
R. SIAGIAN
NO. C67961
EXP. 06/30/11
CIVIL
STATE OF CALIFORNIA

PROJECT ENGINEER 8/26/10 DATE

COUNTY OF LOS ANGELES DEPARTMENT OF PUBLIC WORKS

HARRIS AVENUE, ET AL.

HARRIS AVE, COATES AVE & HERBERT AVE
STAIRWAY, CURB & WALL DETAILS
PROJECT ID NO. RDC001687
T.G. 635 - E3, D4 & E4

■ 17

RDC001687	JOB X2101572	DWG PH075584	SHEET 15 OF ~~16~~

AS BUILT DRAWINGS

DATE | REVIEWED BY | CADD PROJECT FILE NAME RDC001687_HARRIS_DGN | CHECKER W. LO | DESIGNER RS | DRAFTER RS

DATE, SCALES TIME, STIMES FILE, SFILES