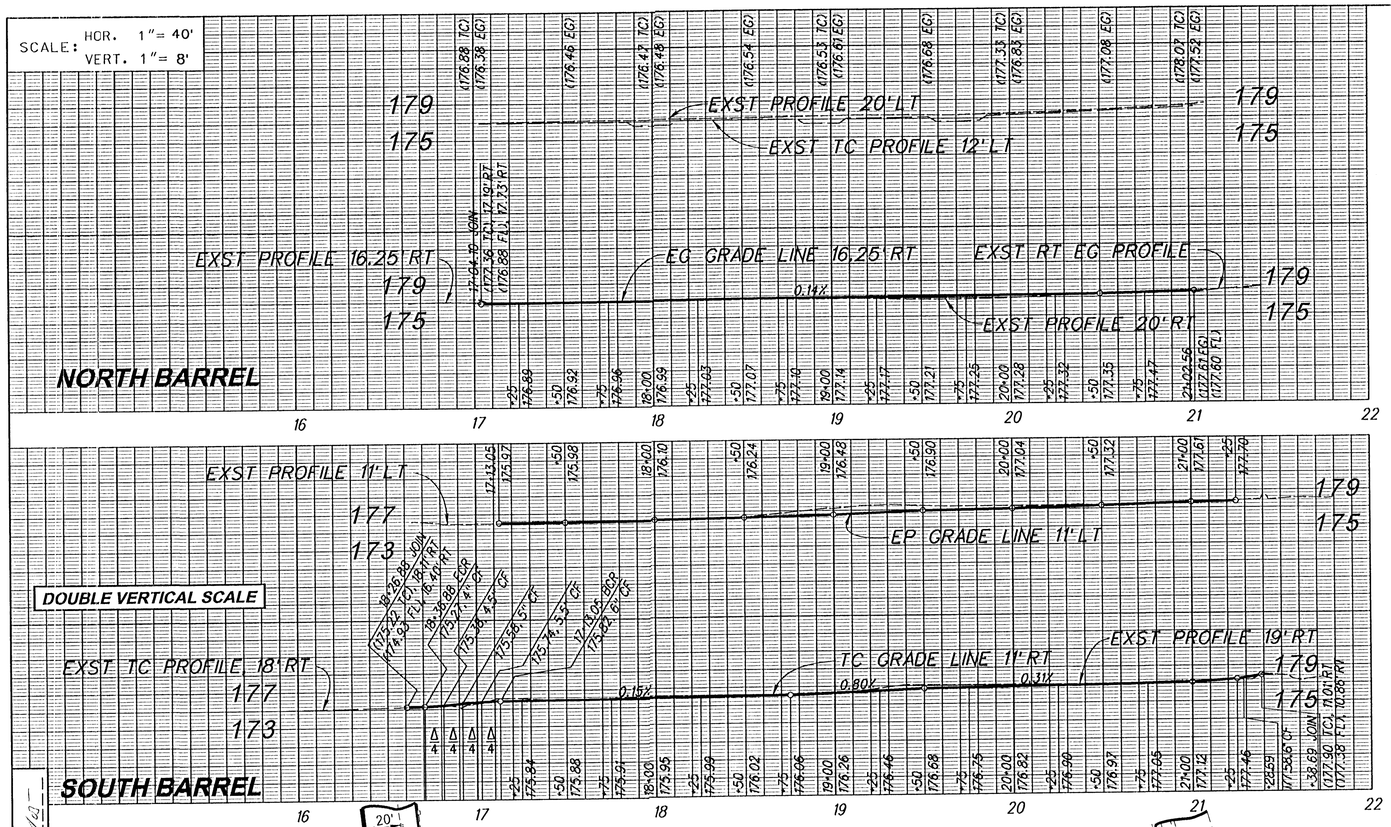


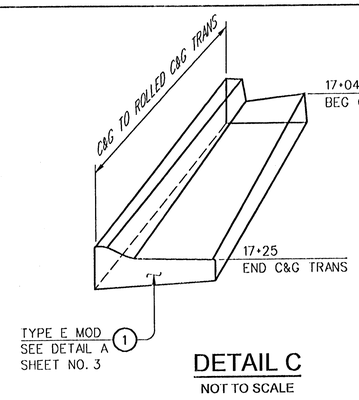


## DETAIL C
NOT TO SCALE

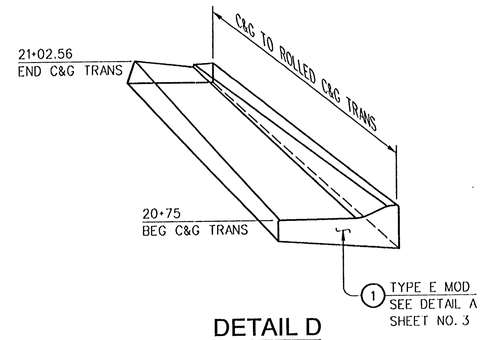


## DETAIL D
NOT TO SCALE

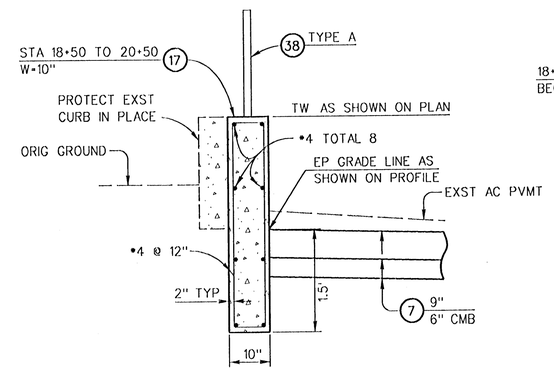


## SECTION A-A
NOT TO SCALE

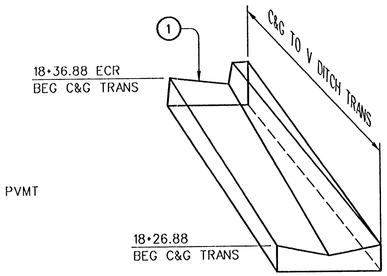


## DETAIL E
NOT TO SCALE

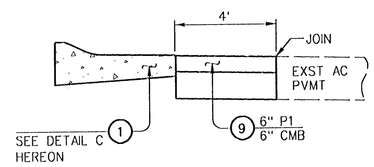


## SECTION B-B
NOT TO SCALE

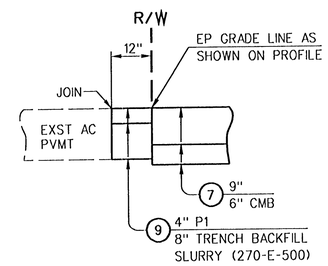


## SECTION C-C
16+94 TO 18+50
20+50 TO 21+38.69
NOT TO SCALE

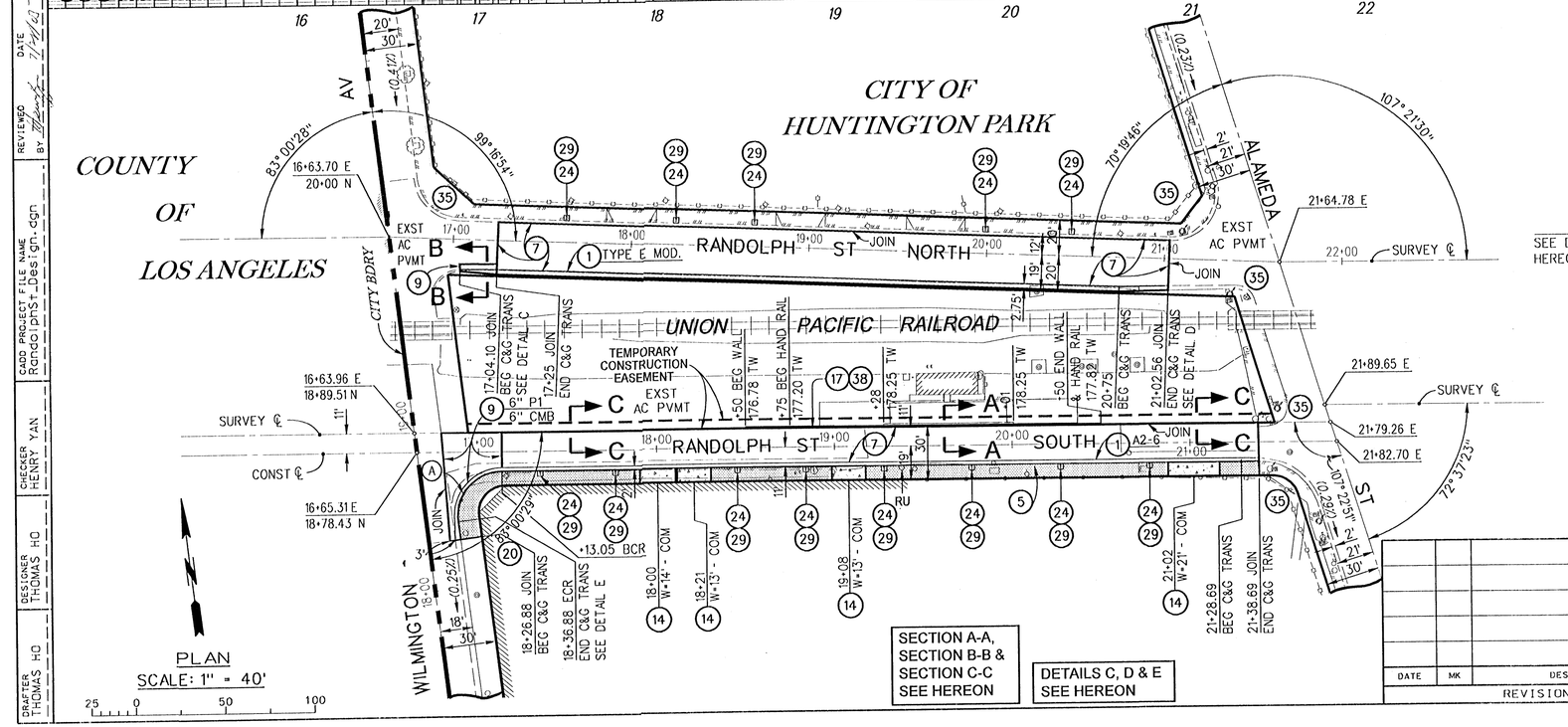


## PLAN
SCALE: 1" = 40'

SECTION A-A, SECTION B-B & SECTION C-C SEE HEREON

DETAILS C, D & E SEE HEREON

## CURVE DATA

| CURVE | RADIUS FT. | CENTRAL ANGLE DEG. | MIN. | SEC. | LENGTH FT. | TANGENT FT. |
|---|---|---|---|---|---|---|
| (A) | 25 | 96 | 59 | 31 | 42.32 | 28.25 |

## BENCH MARK
BM 4-A EST (180.94) WATTS 95 NAVD 88
BR CAP USGS BM S/FACE BLVD
•6000 ALAMEDA ST (E B) NE COR
COR 1.8 E/O SW BLDG COR
PWLB 1021 PAGE 6747

| DATE | MK | DESCRIPTION |
|---|---|---|
| | | |

REVISIONS

REGISTERED PROFESSIONAL ENGINEER
THOMAS HO
NO. C 060649
EXP. 12/31/06
CIVIL
STATE OF CALIFORNIA

Thomas Ho 7/28/05
PROJECT ENGINEER DATE

COUNTY OF LOS ANGELES DEPARTMENT OF PUBLIC WORKS

# RANDOLPH STREET – HOLMES AVENUE TO PACIFIC BOULEVARD

PROJECT ID NO. RDC0014410

JOB X2100471 | DWG PH075593 | SHEET 6 OF 12

DRAFTER THOMAS HO | DESIGNER THOMAS HO | CHECKER HENRY YAN | CADD PROJECT FILE NAME Randolph St_Design.dgn | REVIEWED BY | DATE 7/28/05