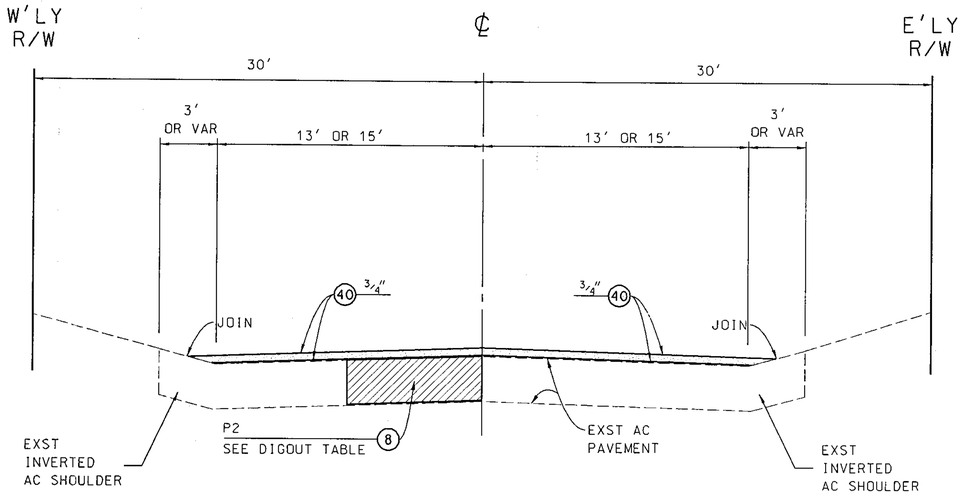

TYPICAL SECTION

ENCINAL CANYON RD - LECHUSA RD TO 7,900' N/O AVENIDA DE ENCINA
LECHUSA RD - DECKER CANYON RD TO ENCINAL CANYON RD
TOTAL LENGTH = 15,382 LF
TOTAL AREA = 461,460 SF
NOT TO SCALE

DIGOUT TABLE			
LOCATION	LENGTH (FT)	WIDTH (FT)	DEPTH (IN)
LECHUSA RD - S/B LANE			
DECKER CYN RD SW CORNER	18	36	6
50' S/O DECKER CYN RD	20	10	6
DECKER CYN RD	50	15	6
LECHUSA RD - N/B LANE			
DECKER CYN RD	7	15	6
ENCINAL CYN RD - N/B LANE			
30' S/O C.M. 4.37	14	20	5
530' S/O C.M. 4.37	9	21	5
600' N/O C.M. 5.41	5	11	5
35' S/O C.M. 5.55	11	47	5
35' S/O C.M. 5.55	13	26	5
95' N/O C.M. 6.04	74	7	5
35' N/O C.M. 6.04	62	9	5
25' N/O C.M. 6.04	7	9	5
ENCINAL CYN RD - S/B LANE			
C.M. 4.71	10	16	5
25' N/O C.M. 6.04	7	9	5
ENCINAL CYN RD - W/B LANE			
150' W/O C.M. 5.09	8	20	5

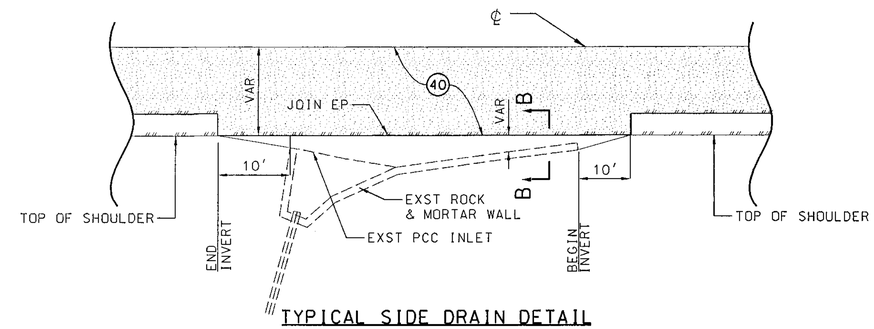

TYPICAL SIDE DRAIN DETAIL

NO SCALE

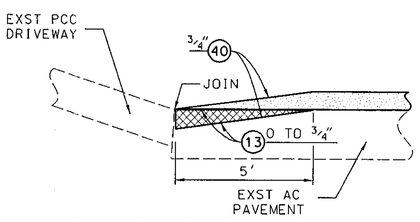

TYPICAL PCC DRIVEWAY JOIN DETAIL

NO SCALE

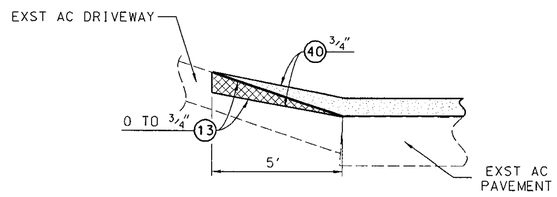

TYPICAL AC DRIVEWAY JOIN DETAIL

NO SCALE

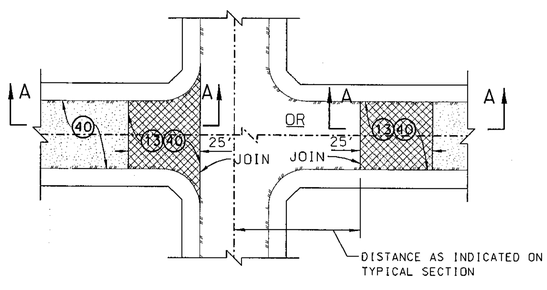

JOIN DETAIL B
TYPICAL AC PAVEMENT JOIN DETAIL

NO SCALE

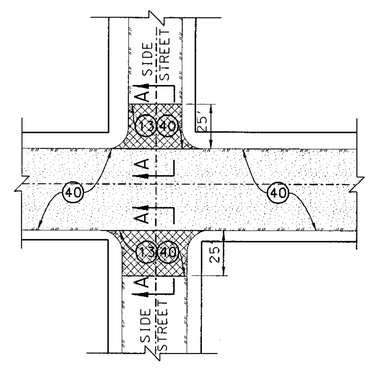

JOIN DETAIL C
TYPICAL PAVE THRU INTERSECTION JOIN DETAIL

NO SCALE

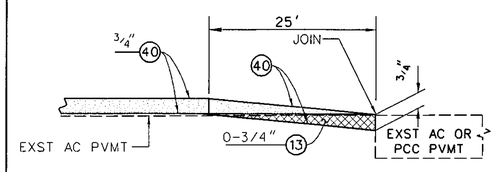

SECTION A-A
TYPICAL TRANSVERSE JOIN DETAIL

NO SCALE

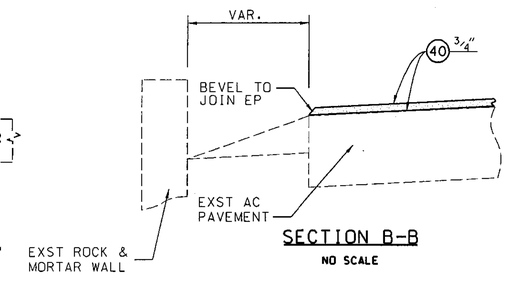

SECTION B-B

NO SCALE

PH078488

DATE		DESCRIPTION

REVISIONS

REGISTERED PROFESSIONAL ENGINEER V. LLANA NO. C63954 EXP. 09/30/10 CIVIL STATE OF CALIFORNIA

PROJECT ENGINEER — DATE 9/18/09

COUNTY OF LOS ANGELES DEPARTMENT OF PUBLIC WORKS

ENCINAL CANYON RD

TYPICAL SECTION AND DETAILS
PROJECT ID NO. RDC0015253

PCA X2301717 | DWG PH078488 | SHEET 3 OF 3

"AS BUILT DRAWINGS"

DRAFTER E. MAGUINO | DESIGNER E. MAGUINO | CHECKER V. LLANA | CADD PROJECT FILE NAME RDC0015253.DGN | REVIEWED BY — DATE 9/18/09

PROPOSED FOR CONSTRUCTION: — DATE | ADVERTISED: — DATE | AS BUILT: — DATE

DATE: $DATE$ TIME: $TIME$ FILE: $FILEL$