SCALE: HOR. 1"=20'
VERT. 1"=8'

REVIEWED BY:
FARHAD AGAHI 12/15/03
CONSULTANT DESIGN SECTION

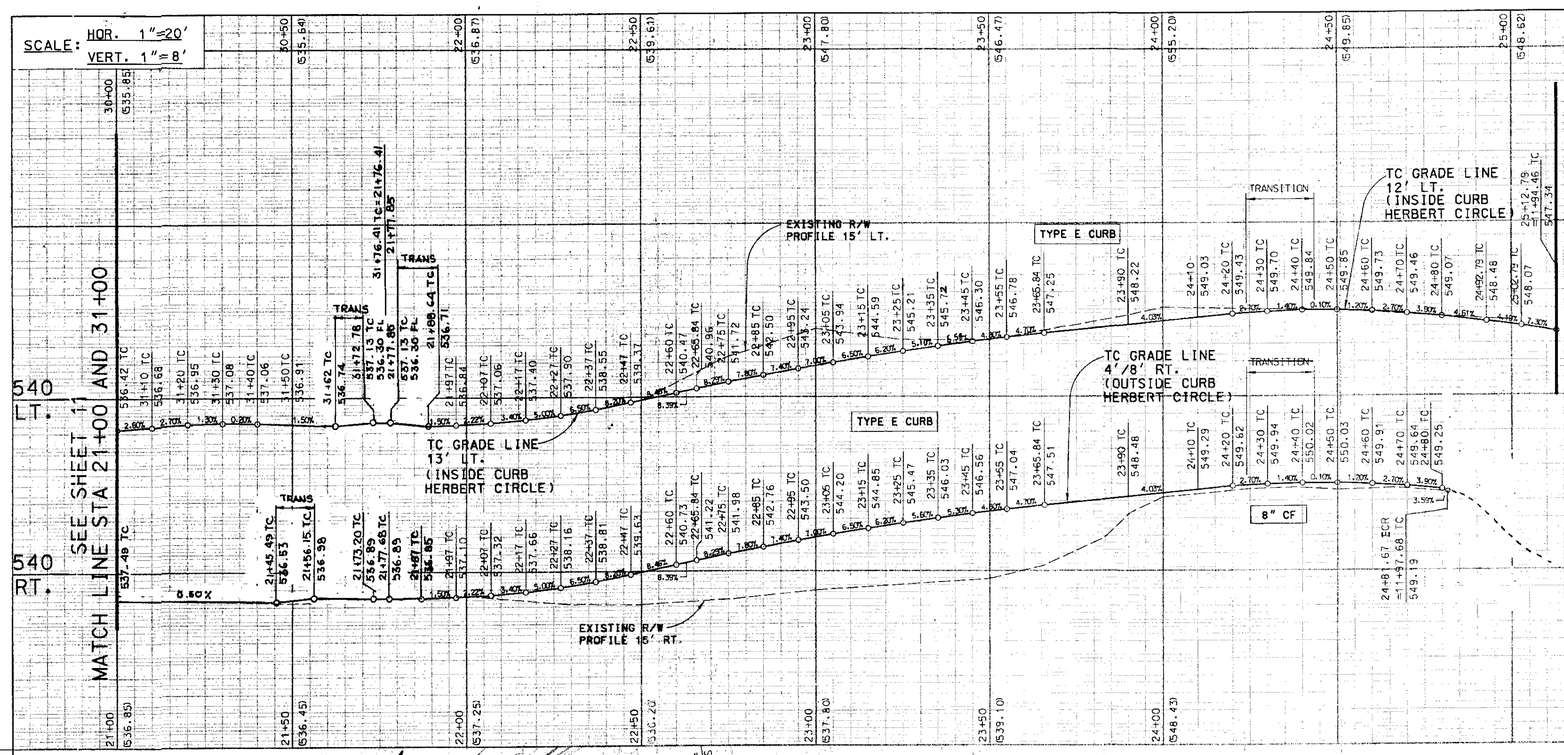

DOUBLE VERTICAL SCALE

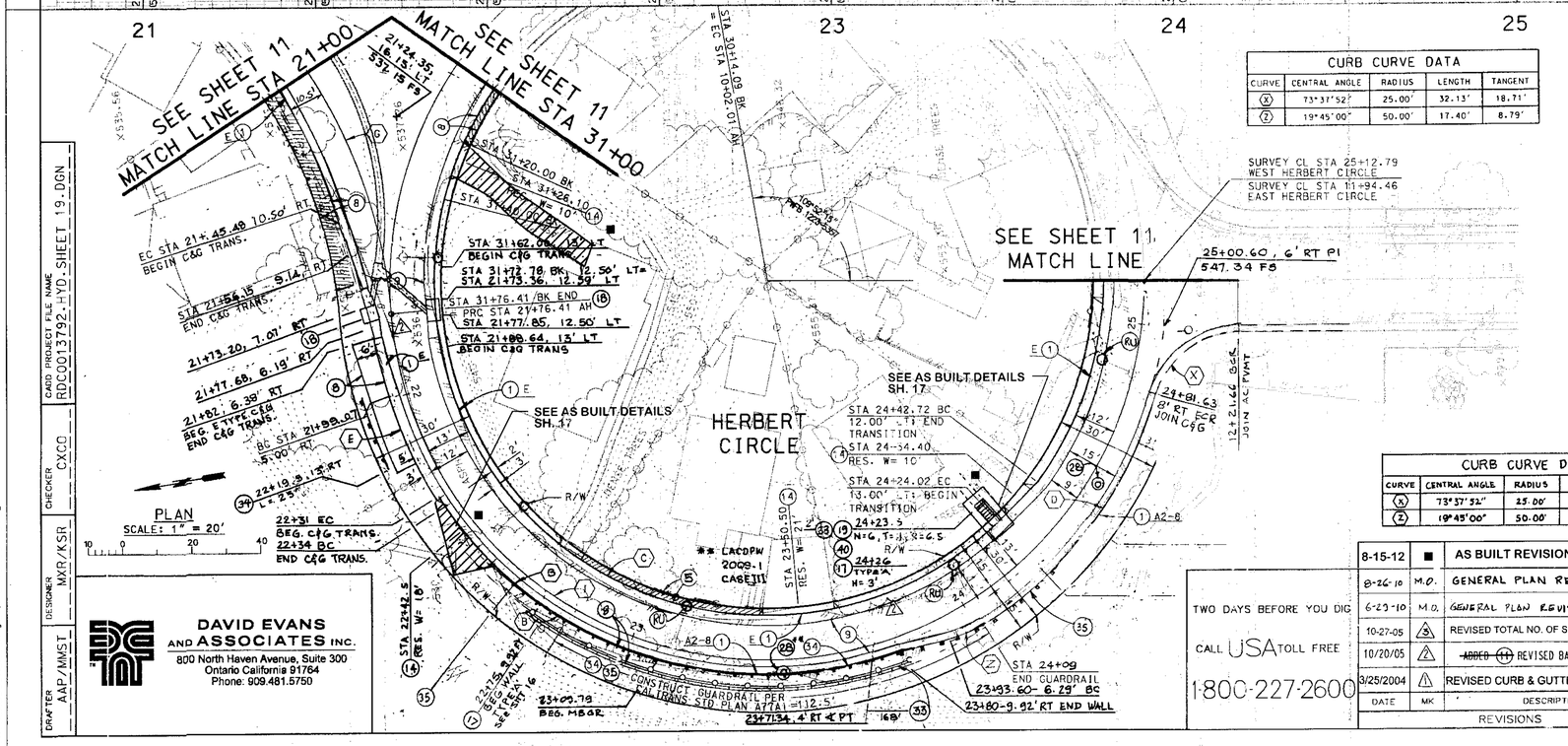

CURB CURVE DATA				
CURVE	CENTRAL ANGLE	RADIUS	LENGTH	TANGENT
(X)	73°37'52"	25.00'	32.13'	18.71'
(Z)	19°45'00"	50.00'	17.40'	8.79'

CURB CURVE DATA				
CURVE	CENTRAL ANGLE	RADIUS	LENGTH	TANGENT
* (E)	25°49'38"	115.00'	51.27'	26.07'
(B)	71°35'41"	114.00'	142.45'	82.21'
* (C)	360°00'00"	97.00'	609.40'	
(D)	37°41'53"	118.00'	77.64'	40.28'

SURVEY CL CURVE DATA				
CURVE	CENTRAL ANGLE	RADIUS	LENGTH	TANGENT
* (G)	67°23'00"	150.00'	176.41'	100.01'
* (I)	360°00'00"	110.00'	691.15'	-

* CURVE DATA IS DUPLICATED ON ANOTHER SHEET

CURB CURVE DATA				
CURVE	CENTRAL ANGLE	RADIUS	LENGTH	TANGENT
(X)	73°37'52"	25.00'	32.13'	18.71'
(Z)	19°45'00"	50.00'	17.40'	8.79'

BENCH MARK NO. 25
CHIS SQ IN CONC SLAB OF STAIRS HSE #1008 HERBERT CIR NW/O HERBERT AVE.
ELEV. =548.650
LA CO DPW BENCH MARK LIST RIVERA QUAD 1995 ADJUSTMENT NAVD 88 DATUM.

PH078767

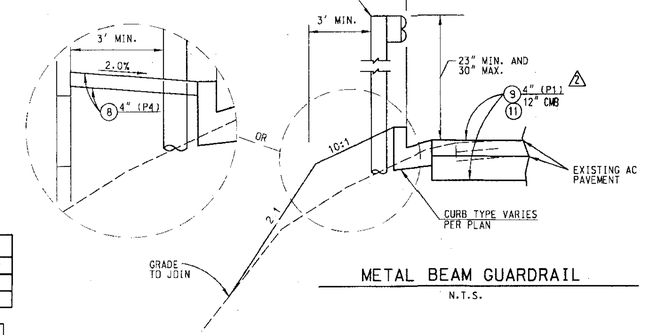

METAL BEAM GUARDRAIL
N.T.S.

DATE	MK	DESCRIPTION
8-15-12	■	AS BUILT REVISIONS
8-26-10	M.O.	GENERAL PLAN REVISIONS
6-23-10	M.O.	GENERAL PLAN REVISIONS
10-27-05	3	REVISED TOTAL NO. OF SHEETS
10/20/05	2	~~ADDED (11)~~ REVISED BASE
3/25/2004	1	REVISED CURB & GUTTER AROUND PF

REVISIONS

TWO DAYS BEFORE YOU DIG
CALL USA TOLL FREE
1-800-227-2600

REGISTERED PROFESSIONAL ENGINEER JEFFREY K. RUPP NO. 42868 EXP. 3/31/2004 CIVIL STATE OF CALIFORNIA
PROJECT ENGINEER 12-12-03 DATE

COUNTY OF LOS ANGELES DEPARTMENT OF PUBLIC WORKS

HARRIS AVENUE, ET AL.

HERBERT CIRCLE
FROM HERBERT AVENUE TO HERBERT CIRCLE

PROJECT ID NO. RDC0011687 (2)

PCA | DWG PH078767 | SHEET 12 OF 16

AS BUILT DRAWINGS

17 ■

CADD PROJECT FILE NAME RDC0013792_HYD-SHEET 19.DGN
CHECKER CXCO
DESIGNER MKR/KSR
DRAFTER AAP/MMST
p:\#\#\osx0006\cadd\hyd\plan\sheet19.dgn