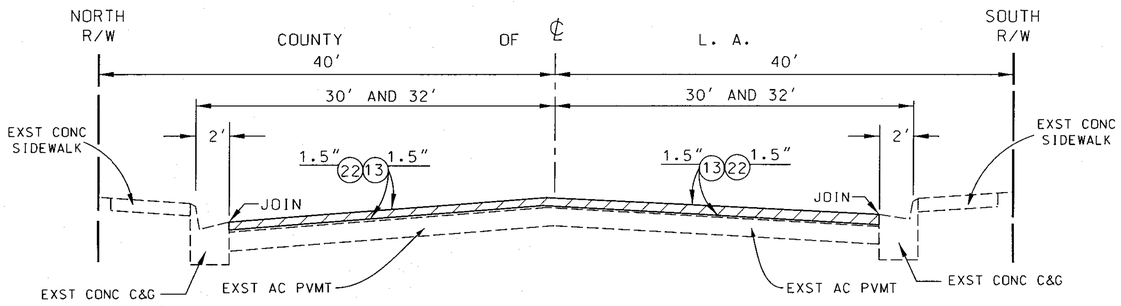

TYPICAL SECTION
STIMSON AVENUE
GALE AVENUE TO 300' S/O SHADYBEND DRIVe
L = 934'
NO SCALE

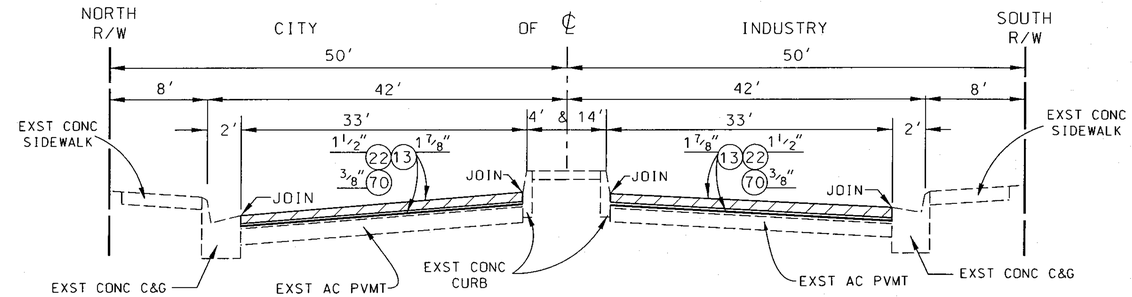

TYPICAL SECTION
COLIMA ROAD
435' W/O WALNUT HALL ROAD TO 445' E/O STONER CREEK ROAD
L = 2188'
NO SCALE

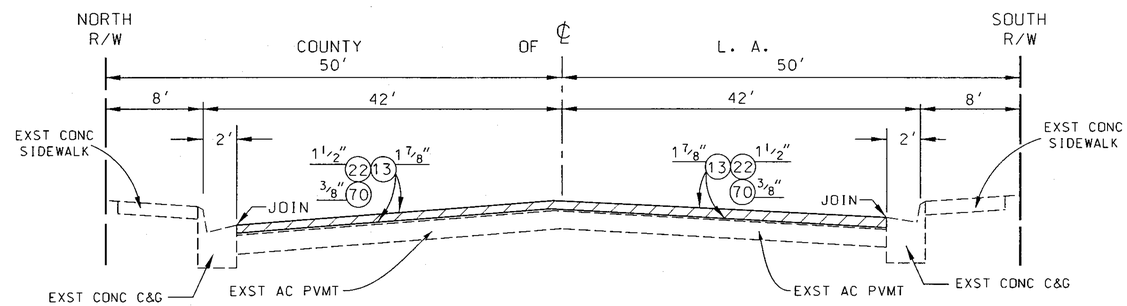

TYPICAL SECTION
COLIMA ROAD
LAKE CANYON DRIVE TO DIAMOND BAR CITY BDRY
L = 1973'
NO SCALE

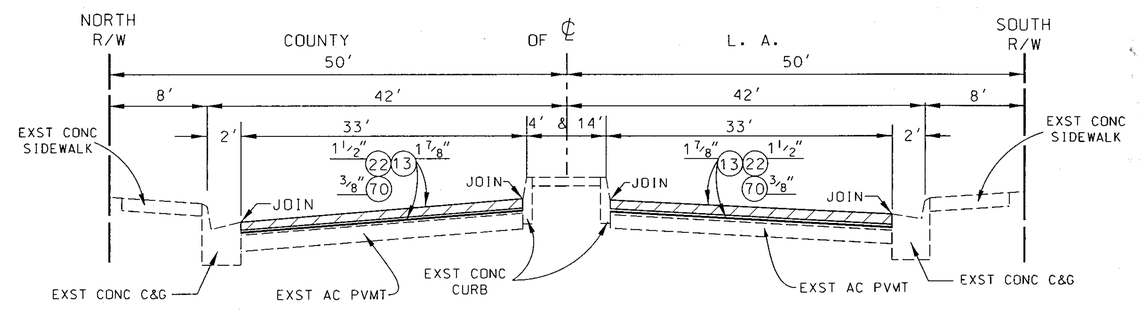

TYPICAL SECTION
COLIMA ROAD
445' E/O STONER CREEK ROAD TO FULLERTON ROAD
L = 1977'
NO SCALE

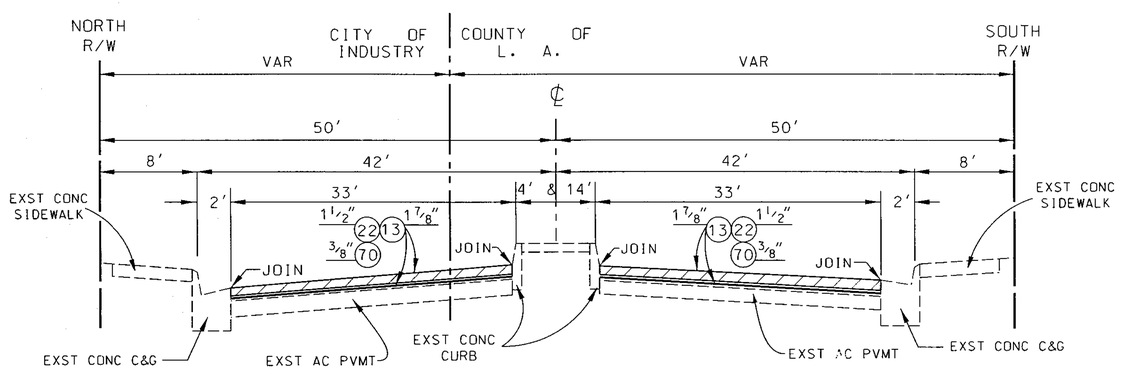

TYPICAL SECTION
COLIMA ROAD
AZUSA AVENUE TO 435' W/O WALNUT HALL ROAD
L = 3705'
NO SCALE

PH078888

DATE	MK	DESCRIPTION

REVISIONS

REGISTERED PROFESSIONAL ENGINEER
SUNG H. KIM
NO. C 46694
EXP. 6-30-11
CIVIL
STATE OF CALIFORNIA

PROJECT ENGINEER 8/16/10 DATE

COUNTY OF LOS ANGELES DEPARTMENT OF PUBLIC WORKS

COLIMA ROAD, ET AL PHASE 2

TYPICAL SECTIONS AND DETAILS
PROJECT ID NO. RDC0015339

PCA X2401846 | DWG PH078888 | SHEET 3 OF 4

"AS BUILT DRAWINGS"

PROPOSED FOR CONSTRUCTION: DATE
ADVERTISED: DATE
AS BUILT: DATE

DRAFTER A. THOMAS
DESIGNER A. THOMAS
CHECKER SUNG KIM
CADD PROJECT FILE NAME RDC0015211.DGN
REVIEWED BY
DATE

DATE, $DATE$ TIME, $TIME$ FILE, $FILEL$