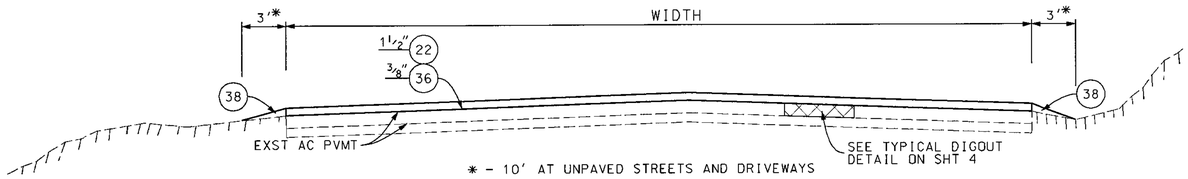

* - 10' AT UNPAVED STREETS AND DRIVEWAYS
SEE TABLE 1 HEREON FOR LOCATIONS AND DIMENSIONS.

TYPICAL SECTION

MULHOLLAND HIGHWAY, TRIUNFO CANYON ROAD, MALIBU CANYON ROAD, AND SIERRA CREEK ROAD

NO SCALE

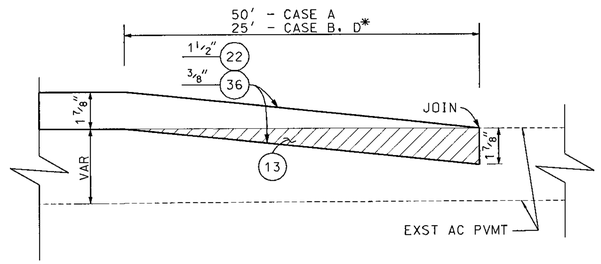

TYPICAL JOIN SECTION

NO SCALE

* - 10' AT DRIVEWAYS

CONSTRUCTION NOTES

PRIME CONTRACTOR LICENSE REQUIRED: CLASS A OR C12.

CONSTRUCTION SYMBOLS

2" P4 ABOVE LINE: INDICATES THE TYPE OF STANDARD OR THICKNESS OF SURFACE MATERIAL IN INCHES; STD PLAN VARIABLES; CURB RAMP CASE

STANDARD PLANS

SPPWC, 2006 EDITION

205-1 SEWER MANHOLE ADJUSTMENT

STATE OF CALIFORNIA, 2006 EDITION

A77A1 METAL BEAM GUARD RAILING - STANDARD RAILING SECTION (WOOD POST WITH WOOD BLOCK)
A77H1 METAL RAILING - END ANCHOR ASSEMBLY (TYPE SFT)
A77L1 METAL BEAM RAILING - TERMINAL SYSTEM (TYPE SRT)
A77L3 METAL BEAM RAILING - TERMINAL SYSTEM (TYPE ET)

CONSTRUCTION LEGEND

3 ASPHALT CONCRETE CURB
8 ASPHALT CONCRETE PAVEMENT
13 COLD MILL ASPHALT CONCRETE PAVEMENT
22 ASPHALT RUBBER HOT MIX (ARHM)
26 ADJUST MANHOLE
34 METAL BEAM GUARD RAIL
35 TERMINAL ANCHOR SYSTEM (TYPE AS SHOWN)
36 ASPHALT RUBBER AGGREGATE MEMBRANE (ARAM)
37 REMOVE EXISTING GUARD RAIL
38 IMPORTED BORROW

AC PAVEMENT CLASS AND GRADE LEGEND

P1 C2-PG 64-10
B-PG 64-10
P3 B-PG 64-10
P2 C2-PG 64-10
P4 D2-PG 64-10

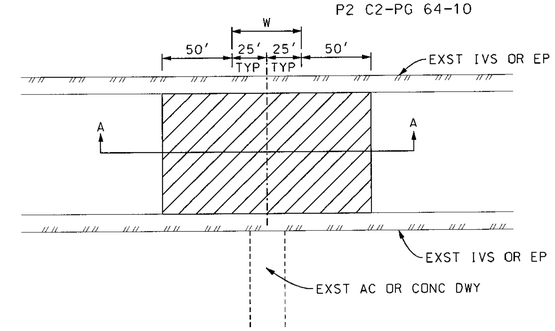

TYPICAL DRIVEWAY DETAIL

NO SCALE

SEE KEY MAP ON SHEET 1 FOR LOCATIONS
IVS - INVERTED SHOULDER

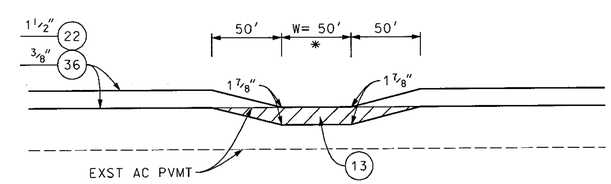

SECTION A-A

NO SCALE

* - W= 50' UNLESS OTHERWISE NOTED

AS-BUILT

	STREET NAME	LIMITS	WIDTH (FT)	LENGTH (FT)	AREA* (SF)	QUANTITIES 13 (SF)	22 (TON)	26 (EA)	36 (SY)
1	MULHOLLAND HY	ENCINAL CYN RD TO 165' E/O ENCINAL CYN RD	40	165	7,000	2,000	66	-	778
2	MULHOLLAND HY	165' E/O ENCINAL CYN RD TO CALAMIGOS RD	30	3,700	111,000	5,000	1,041	-	12,333
3	MULHOLLAND HY	CALAMIGOS RD TO 500' W/O KANAN RD	30	1,100	39,000	5,000	366	-	4,333
4	MULHOLLAND HY	500' W/O KANAN RD TO 260' W/O KANAN RD	46	240	12,000	-	113	-	1,334
5	MULHOLLAND HY	260' W/O KANAN RD TO KANAN RD	50	260	14,000	4,000	132	-	1,556
6	MULHOLLAND HY	BE/TRIUNFO CK/1180 TO BW/MEDEA CK/1092	28	8,235	239,000	31,000	2,194	5	25,667
7	MULHOLLAND HY	BE/MEDEA CK/1092 TO 395' W/O CORNELL RD	28	1,083	31,000	2,000	291	-	3,444
8	MULHOLLAND HY	395' W/O CORNELL RD TO 35' E/O CORNELL RD	60	430	29,000	3,000	272	-	3,222
9	MULHOLLAND HY	35' E/O CORNELL RD TO 3735' W/O BW/LAS VIRGENES CK/0833	32	11,770	379,000	4,000	3,554	-	42,111
10	MULHOLLAND HY	2715' W/O BW/L VRG CK/0833 TO 570' W/O BW/L VRG CK/0833	28	2,145	61,000	3,000	572	-	6,778
11	TRIUNFO CYN RD	4670' W/O LOBO CANYON RD TO LOBO CANYON RD	26	4,670	126,000	6,000	1,182	1	14,000
12	TRIUNFO CYN RD	LOBO CANYON RD TO BE/LOBO CK/0940	30	176	7,000	2,000	66	1	778
13	TRIUNFO CYN RD	BE/LOBO CK/0940 TO KANAN RD	28	3,910	111,000	6,000	1,041	1	12,334
14	MALIBU CYN RD	2900' N/O MALIBU CREST DR TO 9318' N/O MALIBU CREST DR	40	6,418	257,000	-	2,410	-	28,556
15	MALIBU CYN RD	9318' N/O MALIBU CREST DR TO 9385' N/O MALIBU CREST DR	38	67	3,000	-	28	-	333
16	MALIBU CYN RD	9385' N/O MALIBU CREST DR TO TUNNEL 0994 (SOUTH END)	28	4,835	136,000	2,000	1,275	-	15,111
17	MALIBU CYN RD	TUNNEL 0994 (NORTH END) TO BS/MALIBU CK/0989	28	3,100	90,000	5,000	844	-	10,000
18	SIERRA CK RD	MULHOLLAND HY TO KANAN RD	26	1,540	41,000	3,000	384	6	4,556

TABLE 1

* - INCLUDES ADDITIONAL AREA FOR CASE B, CASE D, AND PAVED SHOULDERS

PLAN A

PH079014

DATE	MK	DESCRIPTION

REVISIONS

REGISTERED PROFESSIONAL ENGINEER GILBERT TSOI NO. 67747 EXP. 6/30/09 CIVIL STATE OF CALIFORNIA

PROJECT ENGINEER 6/4/09 DATE

COUNTY OF LOS ANGELES DEPARTMENT OF PUBLIC WORKS

MULHOLLAND HIGHWAY, ET AL.

TYPICAL SECTIONS, TABLES, AND DETAILS

PROJECT ID NO. RDC0015194

PREVENTIVE MAINTENANCE PROJECT

PCA X2301652 | DWG | SHEET 2 OF 4

PS-CR1 07/06

PLAN RD

DRAFTER J. GARCIA | DESIGNER J. GARCIA | CHECKER G. TSOI | CADD PROJECT FILE NAME RDC0015194-PLAN-RD.DGN | REVIEWED BY | DATE 6/04/09

DATE: 05/14/2009 TIME: 10:28:30 AM FILE: C:\MyFiles\Gilbert\Mulholland Hwy\RDC0015194-PLAN A.dgn