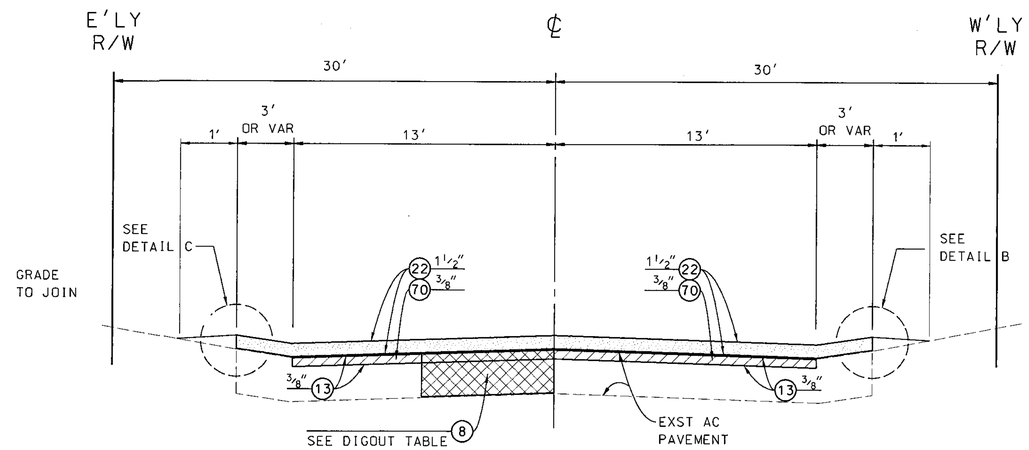

TYPICAL SECTION

NOT TO SCALE

LAS VIRGENES RD - 1800' S/O MULHOLLAND HY TO 2500' N/O PIUMA RD

LAS VIRGENES RD - 2140' N/O PIUMA RD TO PIUMA RD

TOTAL LENGTH = 6,654 LF

TOTAL AREA = 212,928 SF

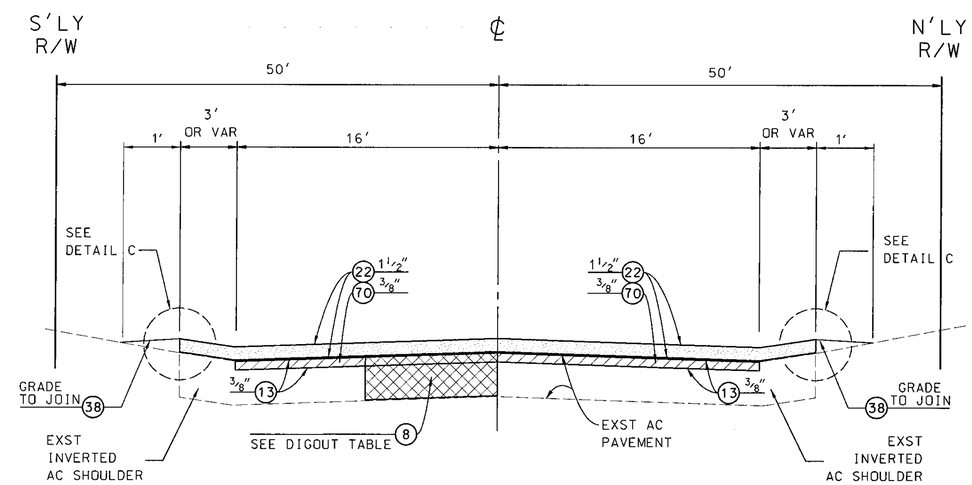

TYPICAL SECTION

ENCINCAL CANYON RD - MULHOLLAND RD TO LECHUSA RD

TOTAL LENGTH = 18,383 LF

TOTAL AREA = 698,554 SF

DIGOUT TABLE

LOCATION	LENGTH (FT)	WIDTH (FT)	DEPTH (IN)
LAS VIRGENES RD - N/B LANE			
(4) MM 4.49	15	3	8
LAS VIRGENES RD - S/B LANE			
MM 4.73	30	3	8
200' S/O MM 4.73	30	3	8
250' S/O MM 4.73	30	3	8
1/2 MI S/O MM 5.15	4	3	8
TAPIA PARK	20	4	8

DIGOUT TABLE

LOCATION	LENGTH (FT)	WIDTH (FT)	DEPTH (IN)
ENCINAL CANYON RD - S/B LANE			
MM 0.45	8	3	5
MM 1.53	3	3	5
MM 2.14	4	4	5
100' N/O MM 3.00	3	3	5
500 ' N/O MM 3.00	30	3	5

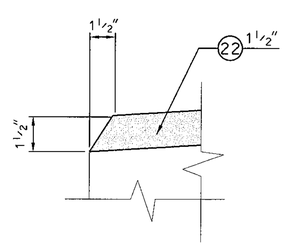

DETAIL "C"

NOT TO SCALE

AS-BUILT

PH079022

PLAN B

DATE		DESCRIPTION

REVISIONS

REGISTERED PROFESSIONAL ENGINEER V. LLANA NO. C63954 EXP. 09/30/10 CIVIL STATE OF CALIFORNIA

PROJECT ENGINEER 6/4/09 DATE

COUNTY OF LOS ANGELES DEPARTMENT OF PUBLIC WORKS

MULHOLLAND HIGHWAY, ET AL.

TYPICAL SECTIONS

PROJECT ID NO. RDC0015194

TG 588 G5.H7

PREVENTIVE MAINTENANCE PROJECT

PCA 2301682 | DWG | SHEET 5 OF 5

TS-DH 07/05

DRAFTER E. MAGUINO | DESIGNER E. MAGUINO | CHECKER V. LLANA | CADD PROJECT FILE NAME RDC0015194-PLAN B.DGN | REVIEWED BY 6/4/09 DATE

PROPOSED FOR CONSTRUCTION: DATE | ADVERTISED: DATE | AS BUILT: DATE

DATE: $DATE$ TIME: $TIME$ FILE: $FILEL$