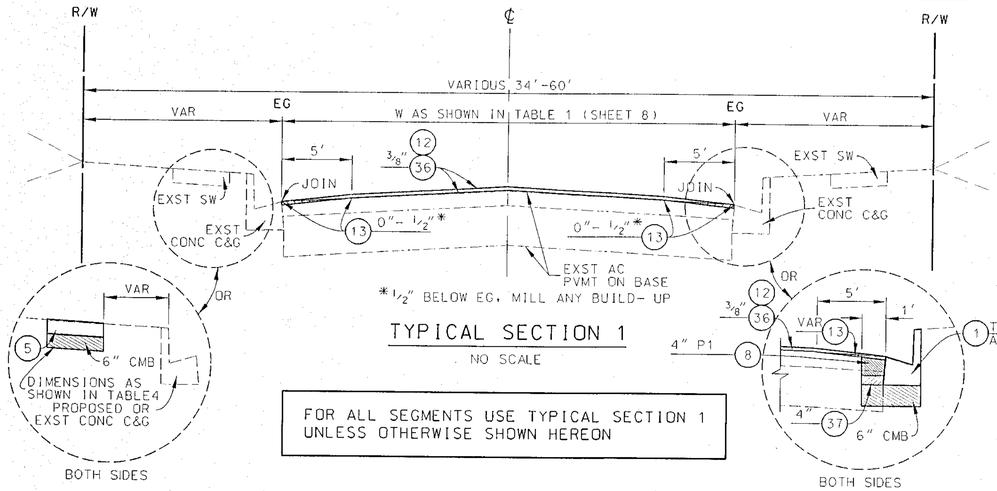

TYPICAL SECTION 1

NO SCALE

FOR ALL SEGMENTS USE TYPICAL SECTION 1 UNLESS OTHERWISE SHOWN HEREON

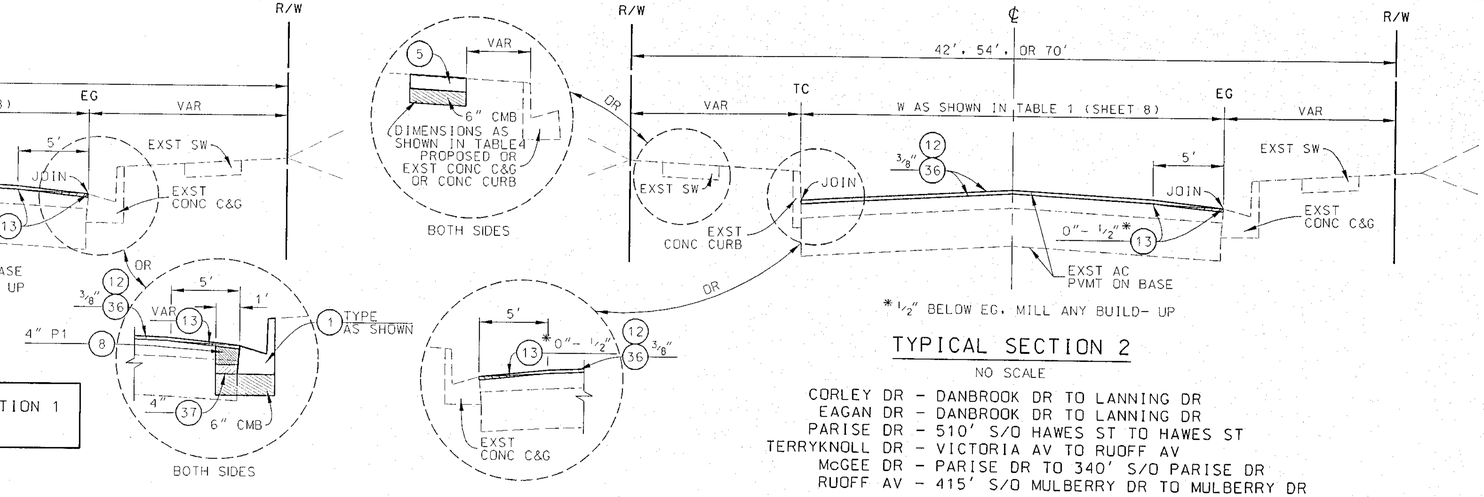

TYPICAL SECTION 2

NO SCALE

CORLEY DR - DANBROOK DR TO LANNING DR
EAGAN DR - DANBROOK DR TO LANNING DR
PARISE DR - 510' S/O HAWES ST TO HAWES ST
TERRYKNOLL DR - VICTORIA AV TO RUOFF AV
McGEE DR - PARISE DR TO 340' S/O PARISE DR
RUOFF AV - 415' S/O MULBERRY DR TO MULBERRY DR

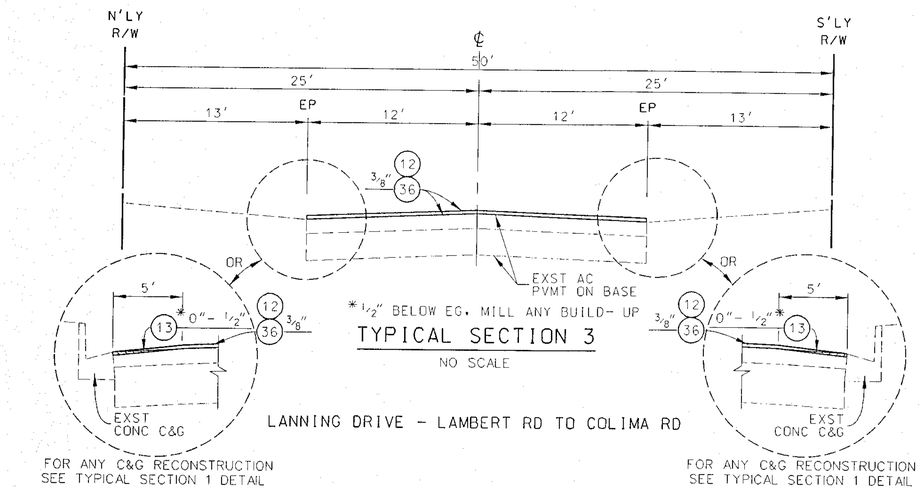

TYPICAL SECTION 3

NO SCALE

LANNING DRIVE - LAMBERT RD TO COLIMA RD

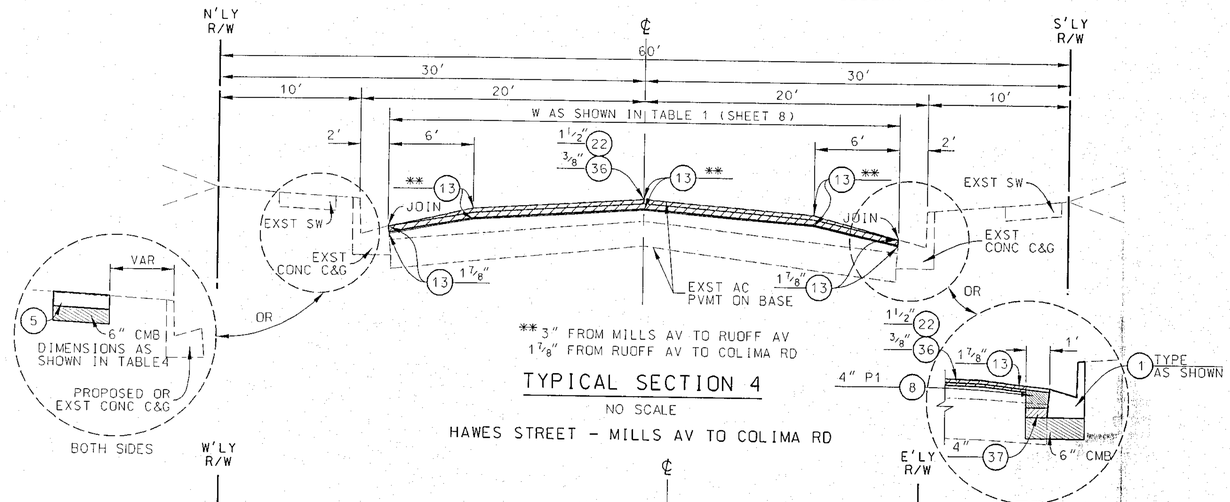

TYPICAL SECTION 4

NO SCALE

HAWES STREET - MILLS AV TO COLIMA RD

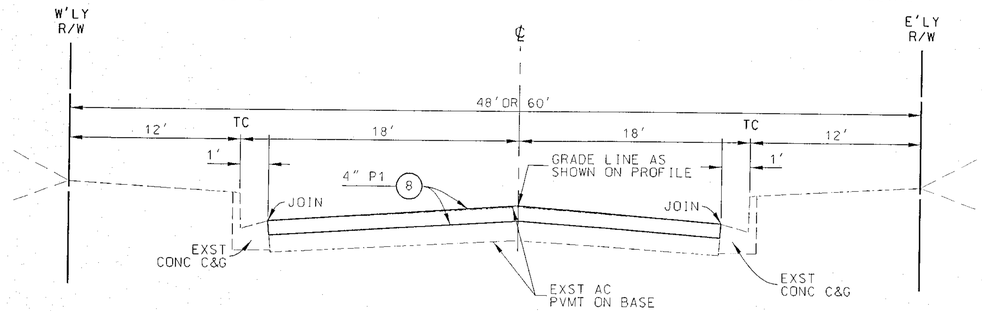

TYPICAL SECTION 5

NO SCALE

VICTORIA AVENUE - MULBERRY DR TO HAWES ST

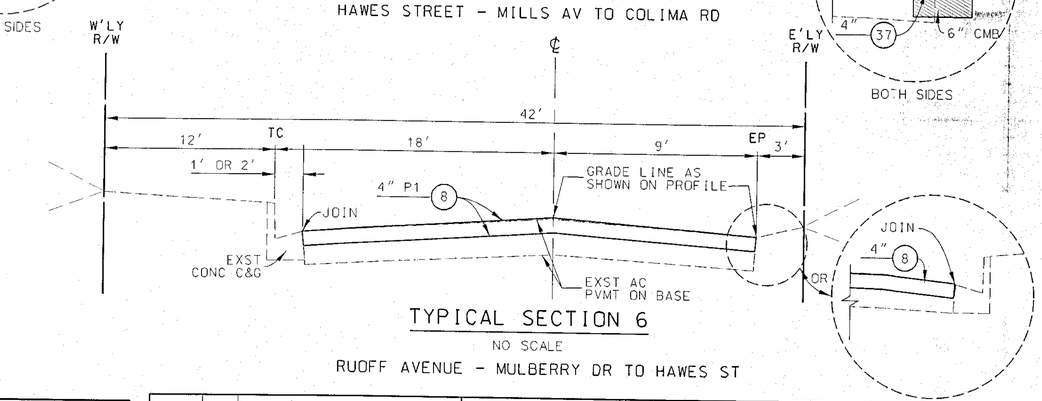

TYPICAL SECTION 6

NO SCALE

RUOFF AVENUE - MULBERRY DR TO HAWES ST

FOR C&G RECONSTRUCTION INFORMATION SEE TABLE 3 ON SHEET 9

FOR SIDEWALK RECONSTRUCTION INFORMATION SEE TABLE 4 ON SHEET 10

DATE	MK	DESCRIPTION

REVISIONS

REGISTERED PROFESSIONAL ENGINEER — M. ORELLANA, NO. C62045, EXP. 03/30/11, CIVIL, STATE OF CALIFORNIA

PROJECT ENGINEER — DATE 4-28-10

COUNTY OF LOS ANGELES DEPARTMENT OF PUBLIC WORKS

HAWES STREET ET AL.

TYPICAL SECTIONS

PROJECT ID NO. RDC0015261

PCA | DWG | SHEET 3 OF 12

DRAFTER J. DIFRANCESCO | DESIGNER J. DIFRANCESCO | CHECKER M. ORELLANA | CADD PROJECT FILE NAME RDC0015261-PLAN-RD.DGN | REVIEWED BY | DATE

DATE: $DATE$ TIME: $TIME$ FILE: $FILEL$

PS-0H (3/03)