COUNTY OF LOS ANGELES

STREET IMPROVEMENTS PLAN
13545 FLORENCE AVENUE

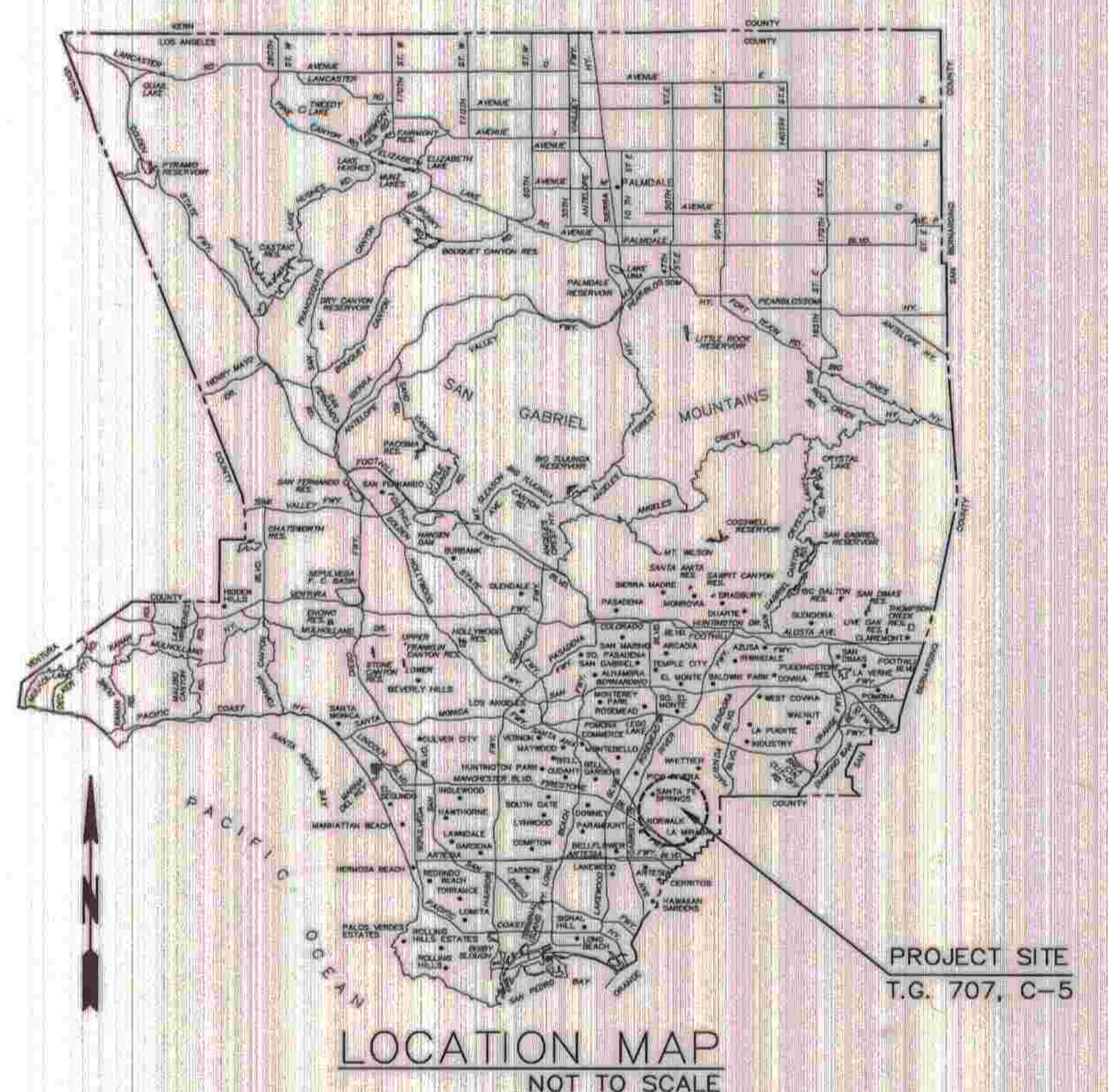

LOCATION MAP
NOT TO SCALE

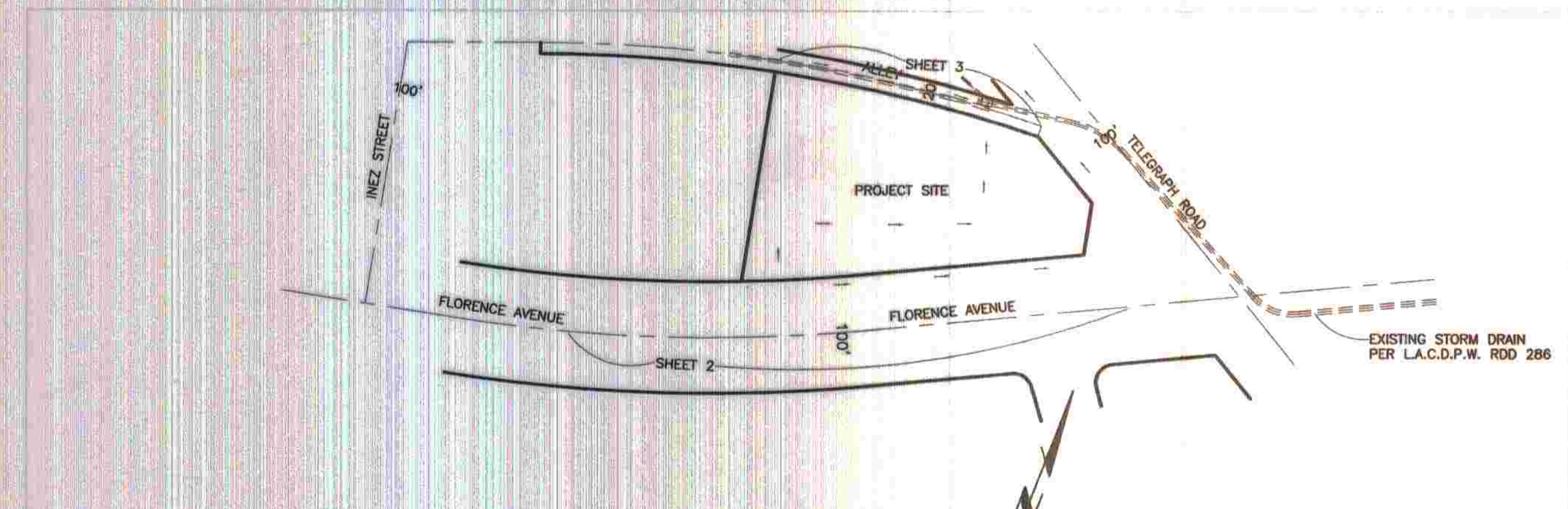

KEY MAP

SCALE: 1"=100'
T.G. 707, C-5
N-34/446

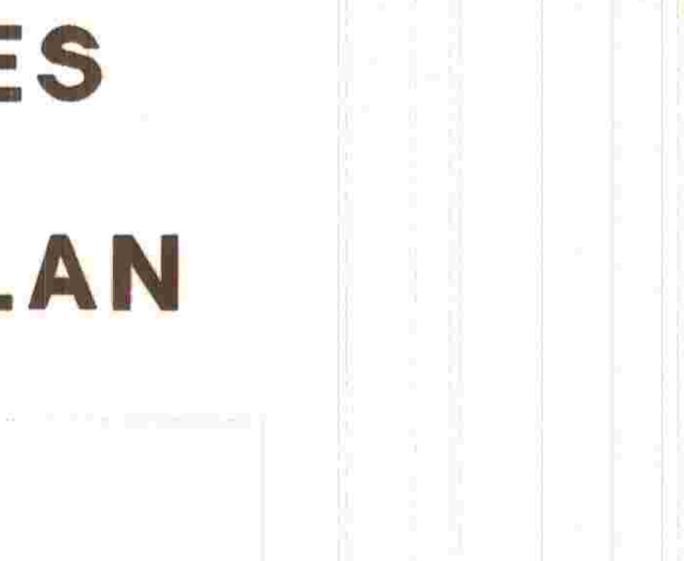

VICINITY MAP
N.T.S.

INDEX TO SHEETS	
SHEET NO.	DESCRIPTION
1	TITLE SHEET
2	FLORENCE AVE. PLAN AND PROFILE
3	ALLEY N/O FLORENCE AVE. PLAN AND PROFILE
4	STRIPING PLAN
5	STREET TREE/IRRIGATION PLAN

BENCH MARK:

B.M. NO. Y 11859
L&DPW TAG IN N CB 300MM(1FT) E/O BCR @ NE COR MILLS AV & TELEGRAPH ROAD

ELEVATION= 156.015 FEET (NAVD 88)
SANTA FE QUAD BASELINE 2005

STREET IMPROVEMENT SHALL NOT BE FIELD ACCEPTED IF ROAD EASEMENTS ARE NOT RECORDED.

ENGINEER'S NOTICE TO CONTRACTORS

1. ALL CONTRACTORS AND SUBCONTRACTORS PERFORMING WORK SHOWN ON OR RELATED ON THESE PLANS SHALL CONDUCT THEIR OPERATIONS SO THAT ALL EMPLOYERS ARE PROVIDED A SAFE PLACE TO WORK AND THE PUBLIC IS PROTECTED. ALL CONTRACTORS AND SUBCONTRACTORS SHALL COMPLY WITH THE "OCCUPATIONAL SAFETY AND HEALTH REGULATIONS" OF THE U.S. DEPARTMENT OF LABOR, AND WITH THE STATE OF CALIFORNIA DEPARTMENT OF INDUSTRIAL RELATIONS' "CONSTRUCTION SAFETY ORDERS".
2. THE EXISTENCE AND LOCATION OF ANY UNDERGROUND UTILITY PIPES OR STRUCTURES SHOWN ON THESE PLANS ARE OBTAINED BY A SEARCH OF AVAILABLE RECORDS. TO THE BEST OF OUR KNOWLEDGE THERE ARE NO EXISTING UTILITIES EXCEPT THOSE SHOWN ON THIS PLAN. THE CONTRACTOR IS REQUIRED TO TAKE ALL PRECAUTIONARY MEASURES TO PROTECT THE UTILITIES SHOWN, AND ANY OTHER LINES OR STRUCTURES NOT SHOWN ON THESE PLANS, AND IS RESPONSIBLE FOR THE PROTECTION OF AND ANY DAMAGE TO THESE LINES OR STRUCTURES.
3. THE CIVIL ENGINEER SHALL NOT BE RESPONSIBLE IN ANY WAY FOR THE CONTRACTORS' AND SUBCONTRACTORS' COMPLIANCE WITH THE "OCCUPATIONAL SAFETY AND HEALTH REGULATIONS" OF THE U.S. DEPARTMENT OF LABOR, OR WITH THE STATE OF CALIFORNIA DEPARTMENT OF INDUSTRIAL RELATIONS' "CONSTRUCTION SAFETY ORDERS".
4. CONTRACTOR FURTHER AGREES THAT HE SHALL ASSUME SOLE AND COMPLETE RESPONSIBILITY FOR JOB SITE CONDITIONS DURING THE COURSE OF CONSTRUCTION OF THIS PROJECT, INCLUDING SAFETY OF ALL PERSONS AND PROPERTY; THAT THIS REQUIREMENT SHALL APPLY CONTINUOUSLY AND NOT BE LIMITED TO NORMAL WORKING HOURS; AND THAT THE CONTRACTOR SHALL DEFEND, INDEMNIFY AND HOLD THE OWNER AND THE ENGINEER HARMLESS FROM ANY AND ALL LIABILITY, REAL OR ALLEGED IN CONNECTION WITH THE PERFORMANCE OF WORK IN THIS PROJECT, EXCEPTING FOR LIABILITY ARISING FROM THE SOLE NEGLIGENCE OF THE OWNER OR THE ENGINEER.
5. CONTRACTOR SHALL VERIFY ALL CONDITIONS AND DIMENSIONS AND SHALL REPORT ALL DISCREPANCIES TO THE ENGINEER PRIOR TO THE COMMENCEMENT OF WORK.

REINHARD STENZEL RCE NO. 56155 DATE

STORMWATER POLLUTION PLAN NOTES

A. NOTES

1. ERODED SEDIMENTS AND OTHER POLLUTANTS MUST BE RETAINED ON SITE AND MAY NOT BE TRANSPORTED FROM THE SITE VIA SHEETFLOW, SWALES, AREA DRAINS, NATURAL DRAINAGE COURSES OR WIND.
2. STOCKPILES OF EARTH AND OTHER CONSTRUCTION RELATED MATERIALS MUST BE PROTECTED FROM BEING TRANSPORTED FROM THE SITE BY THE FORCES OF WIND OR WATER.
3. FUELS, OILS, SOLVENTS, AND OTHER TOXIC MATERIALS MUST BE STORED IN ACCORDANCE WITH THEIR LISTING AND ARE NOT TO CONTAMINATE THE SOIL AND SURFACE WATERS. ALL APPROVED STORAGE CONTAINERS ARE TO BE PROTECTED FROM THE WEATHER. SPILLS MUST BE CLEANED UP IMMEDIATELY AND DISPOSED OF IN A PROPER MANNER. SPILLS MAY NOT BE WASHED INTO THE DRAINAGE SYSTEM.
4. EXCESS OR WASTE CONCRETE MAY NOT BE WASHED INTO THE PUBLIC WAY OR ANY OTHER DRAINAGE SYSTEM. PROVISIONS SHALL BE MADE TO RETAIN CONCRETE WASTES ON SITE UNTIL THEY CAN BE DISPOSED OF AS SOLID WASTE.
5. TRASH AND CONSTRUCTION RELATED SOLID WASTES MUST BE DEPOSITED INTO A COVERED RECEPTACLE TO PREVENT CONTAMINATION OF RAINWATER AND DISPERSAL BY WIND.
6. SEDIMENTS AND OTHER MATERIALS MAY NOT BE TRACKED FROM THE SITE BY VEHICLE TRAFFIC. THE CONSTRUCTION ENTRANCE ROADWAYS MUST BE STABILIZED SO AS TO INHIBIT SEDIMENTS FROM BEING DEPOSITED INTO THE PUBLIC WAY. ACCIDENTAL DEPOSITIONS MUST BE SWEPT UP IMMEDIATELY AND MAY NOT BE WASHED DOWN BY RAIN OR OTHER MEANS.
7. ANY SLOPES WITH DISTURBED SOILS OR DENUDED OF VEGETATION MUST BE STABILIZED SO AS TO INHIBIT EROSION BY WIND AND WATER.

B. THE FOLLOWING BMPs AS OUTLINED IN, BUT NOT LIMITED TO, THE "BEST MANAGEMENT PRACTICE HANDBOOK, CALIFORNIA STORMWATER QUALITY TASK FORCE, SACRAMENTO, CALIFORNIA 2003," OR THE LATEST REVISED EDITION, MAY APPLY DURING THE CONSTRUCTION OF THIS PROJECT (ADDITIONAL MEASURES MAY BE REQUIRED IF DEEMED APPROPRIATE BY COUNTY INSPECTORS):

TEMPORARY SOIL STABILIZATION

- SS1 - SCHEDULING
- SS2 - PRESERVATION OF EXISTING VEGETATION
- SS3 - HYDRAULIC MULCH
- SS4 - HYDROSEEDING
- SS5 - SOIL BINDERS
- SS6 - STRAW MULCH
- SS7 - GEOTEXTILES, PLASTIC COVERS, & EROSION CONTROL BLANKETS/MATS
- SS8 - WOOD MULCHING
- SS9 - EARTH DIKES/DRAINAGE SWALES & LINED DITCHES
- SS10 - OUTLET PROTECTION/VELOCITY DISSIPATION DEVICES
- SS11 - SLOPE DRAINS
- SS12 - STREAMBANK STABILIZATION

TEMPORARY SEDIMENT CONTROL

- SC1 - SILT FENCE
- SC2 - SEDIMENT/DESILTING BASIN
- SC3 - SEDIMENT TRAP
- SC4 - CHECK DAM
- SC5 - FIBER ROLLS
- SC6 - GRAVEL BAG BERM
- SC7 - STREET SWEEPING AND VACUUMING
- SC8 - SANDBAG BARRIER
- SC9 - STRAW BALE BARRIER
- SC10 - STORM DRAIN INLET PROTECTION

WIND EROSION CONTROL

- WE1 - WIND EROSION CONTROL

TRACKING CONTROL

- TC1 - STABILIZED CONSTRUCTION ENTRANCE/EXIT
- TC2 - STABILIZED CONSTRUCTION ROADWAY
- TC3 - ENTRANCE/OUTLET TIRE WASH

WASTE MANAGEMENT AND MATERIALS POLLUTION CONTROL

- WM1 - MATERIAL DELIVERY AND STORAGE
- WM2 - MATERIAL USE
- WM3 - STOCKPILE MANAGEMENT
- WM4 - SPILL PREVENTION AND CONTROL
- WM5 - SOLID WASTE MANAGEMENT
- WM6 - HAZARDOUS WASTE MANAGEMENT
- WM7 - CONTAMINATED SOIL MANAGEMENT
- WM8 - CONCRETE WASTE MANAGEMENT
- WM9 - SANITARY/SEPTIC WASTE MANAGEMENT
- WM10 - LIQUID WASTE MANAGEMENT

NON-STORMWATER MANAGEMENT

- NS1 - WATER CONSERVATION PRACTICES
- NS2 - DEWATERING OPERATIONS
- NS3 - PAVING AND GRINDING OPERATIONS
- NS4 - TEMPORARY STREAM CROSSING
- NS5 - CLEAR WATER DIVERSION
- NS6 - ILLICIT CONNECTION/ILLEGAL DISCHARGE DETECTION AND REPORTING
- NS7 - POTABLE WATER/IRRIGATION
- NS8 - VEHICLE AND EQUIPMENT CLEANING
- NS9 - VEHICLE AND EQUIPMENT FUELING
- NS10 - VEHICLE AND EQUIPMENT MAINTENANCE
- NS11 - PILE DRIVING OPERATIONS
- NS12 - CONCRETE CURING
- NS13 - MATERIAL AND EQUIPMENT USE OVER WATER
- NS14 - CONCRETE FINISHING
- NS15 - STRUCTURE DEMOLITION/REMOVAL OVER OR ADJACENT TO WATER

CATCH BASIN STENCIL DETAIL

ALL CATCH BASINS AND INLETS THAT DISCHARGE INTO AN EXISTING OR PROPOSED STORM DRAIN MUST BE STENCILED TO DISCOURAGE ILLEGAL DUMPING OF POLLUTANTS. THIS STENCIL SHALL HAVE A MINIMUM DIAMETER OF 30 INCHES.

CRUSHED MISCELLANEOUS BASE (CMB) NOTES

Prior to Construction

1. CMB shall comply with the requirements of Section 200-2.4 of the "Greenbook", Standard Specifications for Public Works Construction, 2003 Edition or latest edition.
2. Place a deposit with Geotechnical and Materials Engineering Division (GMED) to include the cost of reviewing the submittal and quality assurance testing. Contact GMED at (626) 458-4928 Extension 3687 for a copy of the current cost estimate worksheet.
3. Submit the following items to GMED for review and approval.* Allow a minimum of two (2) working days for review of submittal(s). Certificate of Compliance will not be accepted as a substitute for these tests.
   - o Source Location of CMB
   - o CMB Gradation (ASTM C 131 Test Grading)
   - o R-value (CT 301)
   - o Sand Equivalent (SE)(CT 217)
   - o Percentage Wear @100 and @ 500 Revolutions (ASTM C 131)

   **Note: Any item not in compliance with Section 200-2.4 of the Greenbook may be resubmitted for review.*
4. Preliminary stamped approval from GMED will be given when all CMB items are in compliance with Section 200-2.4 of the Greenbook.
5. Submit a Quality Control (QC) plan to GMED for review and approval.

During Construction

1. Contact GMED at (626)458- 1707 to schedule the Quality Assurance (QA) testing of CMB. Provide a minimum of 48 hours advance notice.
2. For every 1,000 tons of CMB, a 100 lb sample shall be obtained and the following quality tests performed by GMED:
   - o Sand Equivalent (CT 217) and gradation per sample
   - o One (1) R-value tests per sample (CT 301)**
   - o Percentage Wear at 100 and at 500 revolutions (ASTM C131) per sample
3. For every 2,500 square feet of CMB, an in-situ density test shall be performed by GMED using the nuclear gauge per CT 231. Please notify GMED a minimum of 24 hour notice to schedule this test.
4. Final approval is contingent upon the QA test results provided by GMED.

*** The R-value requirement may be waived provided the material has a SE of 40 or more.*

After Construction

Submit the results of the Quality Control (QC) test to GMED. A notification of the QC test result approval shall be provided to the County Inspector.

STREET IMPROVEMENT CONSTRUCTION NOTES

1. SAWCUT AND REMOVE EXISTING ASPHALT CONCRETE PAVEMENT
2. SAWCUT AND REMOVE EXISTING CURB & GUTTER
3. CONSTRUCT 6" CURB AND GUTTER A3-6(150) PER SPPWC STD. PLAN NO. 120-2
4. CONSTRUCT 6" A.C. PAVEMENT (2" C2-PG 64-10 FINISH COURSE AND 4" B-PG 64-10 BASE COURSE) ON 10" CRUSHED AGGREGATE BASE.
5. COLDMILL 1-1/2" OF EXISTING A.C. AND OVERLAY WITH 1-1/2" A.C. C2-PG 64-10 PAVEMENT.
10. REMOVE PORTION OF EXISTING RAISED MEDIAN AND LANDSCAPE.
13. CONSTRUCT 4" P.C.C. OVER 6" C.A.B.

ROAD
STANDARD NOTES

THE FOLLOWING GENERAL NOTES ARE TO BE INCLUDED ON THE TITLE SHEET OF ALL ROAD PLANS:

1. A PERMIT SHALL BE OBTAINED AND FEES PAID FOR CONSTRUCTION INSPECTION TO THE DEPARTMENT OF PUBLIC WORKS AT THE PERMIT COUNTER, 900 SOUTH FREMONT AVENUE, 8TH FLOOR, ALHAMBRA AT LEAST 72 HOURS PRIOR TO STARTING WORK UNDER THIS CONTRACT.

~~2. WHEN WORK IS WITHIN A CONTRACT CITY, THE CONTRACTOR MUST CONTACT THE DIRECTOR OF PUBLIC WORKS OF THAT CITY TO DETERMINE THE LOCATION TO PAY THE INSPECTION FEES.~~

3. THE CONTRACTOR SHALL CONTACT THE DISTRICT OFFICE LISTED ON THE PERMIT APPLICATION TO ARRANGE FOR AN ACCEPTABLE CONSTRUCTION START DATE.

~~4. A PERMIT MUST BE OBTAINED FROM THE LOS ANGELES COUNTY DEPARTMENT OF PUBLIC WORKS, CONSTRUCTION DIVISION AT (626) 458-3129 FOR ALL STORM DRAIN CONNECTIONS.~~

~~5. FOR ALL WORK WITHIN CALTRANS R/W OR INCORPORATED CITIES, SUBJECT TO INSPECTION AND APPROVAL OF CALTRANS OR CITIES, OBTAIN A PERMIT FROM CALTRANS OR OTHER CITIES 30 DAYS PRIOR TO CONSTRUCTION WITHIN THEIR RIGHT-OF-WAY.~~

6. ALL WORK SHALL CONFORM TO THE "SPPWC" (STANDARD PLANS FOR PUBLIC WORKS CONSTRUCTION, ALSO COMMONLY REFERRED TO AS "APWA") AND THE STANDARD SPECIFICATIONS FOR PUBLIC WORKS CONSTRUCTION, SUPPLEMENTED WITH THE LOS ANGELES COUNTY DEPARTMENT OF PUBLIC WORKS STANDARD PLANS 2000 EDITION. THE LATEST EDITIONS OF THESE MANUALS SHALL BE USED UNLESS OTHERWISE NOTED ON THE PLANS.

7. WORK IN PUBLIC STREETS, ONCE BEGUN, SHALL BE PROSECUTED TO COMPLETION WITHOUT DELAY SO AS TO PROVIDE MINIMUM INCONVENIENCE TO ADJACENT PROPERTY OWNERS AND TO THE TRAVELING PUBLIC. FAILURE TO COMPLY WITH THIS REQUIREMENT IS A VIOLATION OF TITLE 16 OF THE COUNTY CODE, HIGHWAY PERMIT CODE.

8. THE CONTRACTOR SHALL TAKE ALL NECESSARY AND PROPER PRECAUTIONS TO PROTECT ADJACENT PROPERTIES FROM ALL DAMAGE THAT MAY OCCUR FROM STORM WATER RUNOFF AND/OR DEPOSITION OF DEBRIS RESULTING FROM ANY AND ALL WORK IN CONNECTION WITH SUBDIVISION CONSTRUCTION.

9. THERE SHALL BE NO ABOVE-GROUND OBSTRUCTION IN ANY PORTION OF THE SIDEWALK EXCEPT WHERE THE WIDTH, EXCLUSIVE OF TOP OF CURB, IS 6 FEET OR GREATER.

~~10. MAIL RECEPTACLES WILL BE NEIGHBORHOOD BOX UNITS INSTALLED PER POST OFFICE REGULATIONS AS SHOWN HEREON. MAILBOX RECEPTACLES SHALL NOT BE LOCATED WITHIN THE RADIUS OF CUL-DE-SAC BULBS AND KNUCKLES. WHERE MAIL RECEPTACLES AND SIDEWALKS ARE LOCATED BEHIND THE CURB, PROVIDE SIDEWALK TRANSITIONS AT ALL MAILBOX LOCATIONS PER DETAILS SHOWN HEREON.~~

11. AT THE EARLIEST OPPORTUNITY OR PRIOR TO FORMING SIDEWALKS, THE CONTRACTOR SHALL CONTACT THE LOCAL POSTAL OFFICE FOR LOCATION APPROVAL AND TYPE OF MAILBOX RECEPTACLES TO BE INSTALLED.

~~12. CONSTRUCT WALK RETURNS AND TRANSITIONS PER DPW STANDARD PLAN 1130-1.~~

13. WHERE SIDEWALKS ARE ADJACENT TO CURB, CONSTRUCT RESIDENTIAL DRIVEWAYS PER SPPWC STANDARD PLAN 110-2 UNLESS OTHERWISE SHOWN. PRIOR TO FORMING CURB AND GUTTER, THE CONTRACTOR SHALL CONFER WITH THE COUNTY INSPECTOR TO SECURE APPROVAL FOR ALL DRIVEWAY LOCATIONS AND WIDTHS. WHERE SIDEWALKS ARE ADJACENT TO CURB, PROVIDE SIDEWALK TRANSITIONS AT ALL DRIVEWAY LOCATIONS PER DETAIL SHOWN HEREON.

~~14. CONSTRUCT STREET NAME SIGNS PER LOCATIONS AS SHOWN ON PLAN IN ACCORDANCE WITH CURRENT COUNTY SPECIFICATIONS AND STANDARD PLANS FOR STREET NAME SIGNS. INSTALLATIONS SHALL CONFORM TO TYPE B FOR STREETS CLASSIFIED AS RESIDENTIAL AND TYPE A FOR STREETS CLASSIFIED AS ANY OTHER CLASSIFICATION ABOVE RESIDENTIAL. ALL STREET NAME SIGNS AT AN INTERSECTION SHALL BE OF THE SAME TYPE AND SHALL HAVE ASTM TYPE IX RETRO-REFLECTIVE SHEETING WITH AN ANTI-GRAFFITI OVERLAY FILM. CONTACT THE LA CO DPW SIGN SHOP AT (626)458-1700 FOR SPECIFICATIONS AND STANDARD PLANS. STREET NAME SIGNS SHALL BE POSTED PRIOR TO OCCUPANCY OF BUILDINGS.~~

15. PROVIDE A STREET LIGHTING SYSTEM APPROVED BY THE STREET LIGHTING SECTION, TRAFFIC AND LIGHTING DIVISION; AND PROVIDE FOR THE TEMPORARY OPERATIONS OF THE STREET LIGHTING SYSTEM.

~~16. THICKNESS OF BASE MATERIALS WILL BE DETERMINED BY THE DEPARTMENT OF PUBLIC WORKS CBR SOIL TEST AND ESTABLISHED BY THE MATERIALS LABORATORY. SUBDIVIDER'S ENGINEER SHALL REQUEST TEST BY THE DEPARTMENT OF PUBLIC WORKS, MATERIALS LABORATORY AT (626) 458-4926, AFTER STREETS HAVE BEEN ROUGH GRADED. PLANS MUST BE REVISED TO SHOW ACTUAL BASE TO BE PLACED.~~

17. CRUSHED MISCELLANEOUS BASE MAY BE USED UNDER CURB AND GUTTER IN LIEU OF CRUSHED AGGREGATE BASE.

18. CRUSHED MISCELLANEOUS BASE OR SELECT MATERIAL WITH EXPANSION OF 3% OR LESS BY THE DEPARTMENT OF PUBLIC WORKS CBR SOIL TEST MAY BE USED IN LIEU OF CRUSHED AGGREGATE BASE UNDER WALKS.

~~19. DRIVEWAYS SHALL NOT ENCROACH IN THE FOUR (4) FEET GUTTER PORTION OF LOCAL DEPRESSIONS.~~

20. PLANT STREET TREES PER LOS ANGELES COUNTY DEPARTMENT OF PUBLIC WORKS "SPECIAL PROVISIONS FOR TREE PLANTING-SUBDIVISION," SPPWC STANDARD PLAN 518-3 THROUGH 524-2 AS REQUIRED, AND PRIOR TO OCCUPANCY OF BUILDINGS. SEE STREET TREE LIST HEREON.

~~21. ALL UTILITY LINES SHALL BE UNDERGROUND PER SECTION 21.24.400 OF TITLE 21 OF THE LOS ANGELES COUNTY CODE. CONTACT CONSTRUCTION DIVISION AT (626) 458-3144 FOR NEW LOCATION OF ANY ABOVE-GROUND UTILITY STRUCTURE IN PARKWAY.~~

~~22. WHERE GRADES EXCEED 6% PLACE PARKWAY PROTECTORS ON DOWNSTREAM SIDE OF ALL DRIVEWAYS PER LADPW STANDARD PLAN 1150-1 AND AT ALL LOT LINES, UNLESS DRIVEWAYS ARE CONSTRUCTED WITHIN 50 FEET OF LOT LINES. SEE DETAILS HEREON.~~

~~23. NO DRIVEWAYS SHOULD BE LOCATED WITHIN 25 FEET UPSTREAM OF A CATCH BASIN WHEN STREET GRADES IS 6% OR GREATER.~~

~~24. RIP RAP NOTES:~~

~~a. ROCKS FOR GROUTED RIP RAP SHALL BE GOOD QUALITY BROKEN CONCRETE AND/OR RIVER RUN ROCK. THE SMALLEST DIMENSION SHALL NOT BE LESS THAN SIX (6) INCHES NOR GREATER THAN 18 INCHES UNLESS OTHERWISE SPECIFIED. THE LARGEST DIMENSION SHALL NOT EXCEED FOUR (4) TIMES THE SMALLEST DIMENSION.~~

~~b. THERE SHALL BE A GROUT BED AT LEAST TWO (2) INCHES BENEATH THE FIRST LAYER OF ROCK. ALL THE VOIDS BETWEEN THE ROCKS SHALL BE FILLED WITH GROUT. MAXIMUM SPACING BETWEEN ROCKS SHALL BE TWO (2) INCHES.~~

~~c. SURFACE ROCKS SHALL BE EMBEDDED FROM 1/2 TO 2/3 OF THEIR MAXIMUM DIMENSION.~~

~~25. PIPE BEDDING SHALL BE:~~

~~IN ACCORDANCE WITH LOS ANGELES COUNTY ENGINEER CASE A BEDDING PER DPW STANDARD PLAN 3092-1 UNLESS OTHERWISE NOTED. THE BEDDING MATERIAL PLACED FROM THE BOTTOM OF THE PIPE TO 1 FOOT OVER THE TOP OF THE PIPE SHALL BE SAND, CRUSHED AGGREGATE, OR NATIVE FREE-DRAINING GRANULAR MATERIAL AND SHALL HAVE A SAND-EQUIVALENT OF 30 OR GREATER.~~
~~-OR-~~
~~ACCORDING TO DPW STANDARD PLAN 3080-1, CASE 3, EXCEPT BELL AND SPIGOT PIPE WHICH SHALL BE CASE 2 BEDDING, UNLESS OTHERWISE SHOWN. "W" VALUES SHALL BE AS SPECIFIED ON DPW STANDARD PLAN 3080-1 FOR CASE 3 BEDDING, NOTES (A), (B), AND (C). IF THE "W" VALUE AT THE TOP OF THE PIPE IS EXCEEDED, THE BEDDING SHALL BE MODIFIED, AND/OR PIPE OF ADDITIONAL STRENGTH SHALL BE PROVIDED. THE PROPOSED MODIFICATION SHALL BE APPROVED BY THE DEPARTMENT.~~

26. ALL CONSTRUCTION JOINTS FOR P.C.C. CURBS, GUTTERS, DRIVEWAYS AND SIDEWALKS SHALL BE IN ACCORDANCE WITH SPPWC STANDARD PLAN NO. 112-2.

27. THE LATEST REVISED STANDARD PLAN OR DRAWING SHALL BE USED UNLESS OTHERWISE SPECIFICALLY NOTED.

28. REPAIR ANY BROKEN OR DAMAGED CURB, GUTTER, SIDEWALK, AND PAVEMENT ON STREETS WITHIN OR ABUTTING THE SUBDIVISION.

29. A SIGNING AND STRIPING PLAN IS REQUIRED. THE APPLICANT ~~SHALL SUBMIT SIGNING AND STRIPING PLANS FOR APPROVAL TO LAND DEVELOPMENT DIVISION (IF NOT ALREADY APPROVED) AND~~ SHALL CONFORM WITH THE APPROVED SIGNING AND STRIPING PLAN PRIOR TO THE ACCEPTANCE OF THE STREETS FOR PUBLIC MAINTENANCE. AFTER OBTAINING THE CONSTRUCTION PERMIT, THE APPLICANT SHALL CONTACT OPERATIONAL SERVICES DIVISION AT (626) 458-1700 TO REQUEST THE FABRICATION AND INSTALLATION OF REQUIRED SIGNAGE AND THE COMPLETION OF STRIPING PER APPROVED PLANS. THE APPLICANT SHALL DEPOSIT APPROPRIATE FEES WITH CONSTRUCTION DIVISION WHEN APPLYING FOR THE PERMIT TO ALLOW COMPLETION OF THE NECESSARY WORK.

30. A TRAFFIC CONTROL PLAN MAY BE REQUIRED FOR WORK WITHIN PUBLIC RIGHT OF WAY. PRIOR TO SECURING A CONSTRUCTION OR EXCAVATION PERMIT, THE APPLICANT/CONTRACTOR SHOULD CONTACT CONSTRUCTION DIVISION AT (626) 458-3129 AT THE EARLIEST POSSIBLE OPPORTUNITY TO DETERMINE IF SUCH A PLAN IS REQUIRED BASED ON THE PROPOSED SCOPE OF WORK. IF A TRAFFIC CONTROL PLAN IS DETERMINED TO BE NECESSARY, THE APPLICANT/CONTRACTOR SHALL SUBMIT PLANS TO CONSTRUCTION DIVISION FOR APPROVAL.

31. ALL EXISTING SIGNS AND POSTS LOCATED WITHIN THE PUBLIC RIGHT OF WAY THAT INTERFERE WITH PROPOSED WORK SHALL BE REMOVED PRIOR TO WORK COMMENCING AND REPLACED IN KIND ONCE WORK HAS BEEN COMPLETED. PLEASE CALL COUNTY OF LOS ANGELES DEPARTMENT OF PUBLIC WORKS OPERATIONAL SERVICES DIVISION AT (626) 458-1708 5 DAYS PRIOR TO COORDINATE.

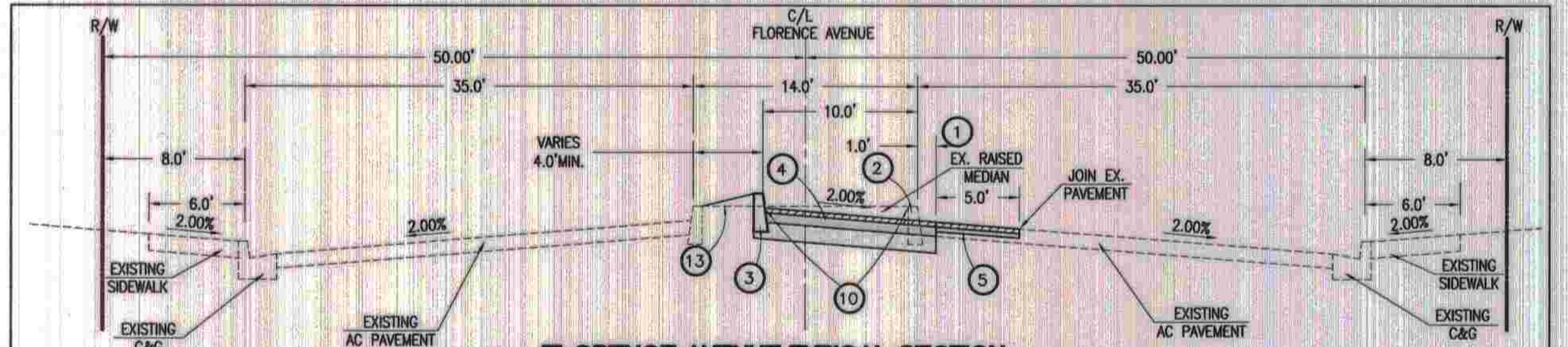

FLORENCE AVENUE TYPICAL SECTION
300' W/O TELEGRAPH RD. TO 600' W/O TELEGRAPH RD. N.T.S.

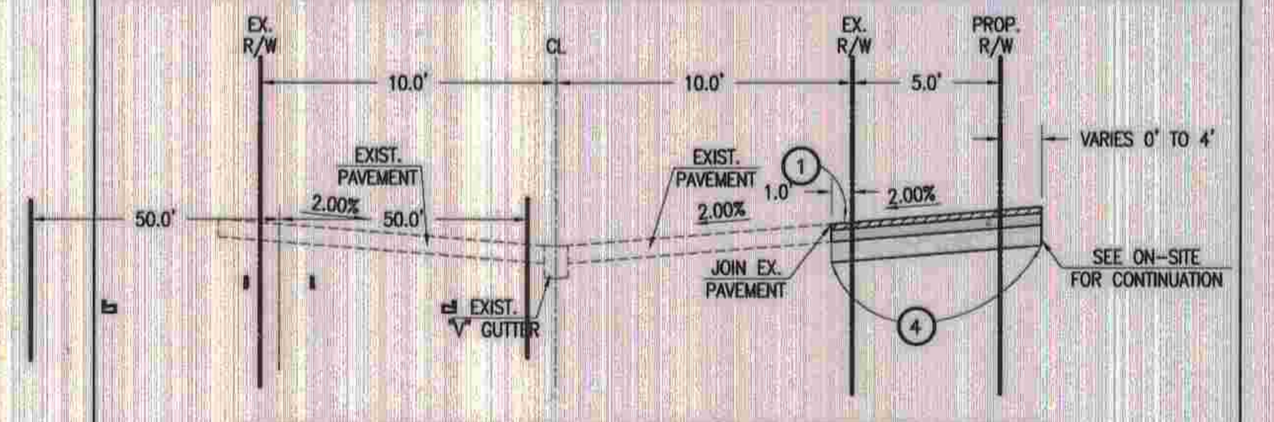

TYPICAL SECTION ON ALLEY N/O FLORENCE AVENUE
250' W/O ALLEY N/O FLORENCE AVENUE TO TELEGRAPH RD.

Underground Service Alert
Call: TOLL FREE
1-800
227-2600
TWO WORKING DAYS BEFORE YOU DIG

STREET TREE LIST				
STREET	LIMITS	NO. TREES	BOTANICAL NAME	COMMON NAME
FLORENCE AVENUE	300' W/O TELEGRAPH RD. TO 600' W/O TELEGRAPH RD.	5	FRANXINUS V. 'RIO GRANDE'	FAN-TEX-ASH
	ALONG LANDSCAPE MEDIAN PROPERTY FRONTAGE	1	FRANXINUS V. 'RIO GRANDE'	FAN-TEX-ASH
TELEGRAPH ROAD	FLORENCE AVE. INT. TO 200' N/O FLORENCE AVE.	2	TRISTANIA CONFERTA	BRISBANE BOX

NOTE: THE INSPECTOR MAY USE HIS/HER DISCRETION TO CHANGE LOCATION, SPACING AND NUMBER OF STREET TREES AS DICTATED BY FIELD CONDITIONS.
SEE SHEET 5 FOR APPROXIMATE LOCATION OF TREES AND IRRIGATION PLANS.

PH079376

APPROVED GAIL FARBER, DIRECTOR OF PUBLIC WORKS
BY [signature] 11/29/10
ASSISTANT DEPUTY DIRECTOR DATE

APPROVED LAND DEVELOPMENT DIVISION
BY [signature] 11/29/10
ASSISTANT DIVISION ENGINEER DATE

REVIEWED
BY [signature] 11/22/2010
ROAD AND GRADING SECTION DATE

NO.	REVISIONS	REVISED BY	APPROVED BY	DATE

Last Update: 11/4/10
O:\2800-2899\2862\STREET\2862ST01.dwg

REGISTERED PROFESSIONAL ENGINEER
REINHARD STENZEL
R.C.E. NO. 56155
Exp. 12-31-10
CIVIL
STATE OF CALIFORNIA
[signature] 11-10-10
REINHARD STENZEL RCE 56155 DATE

T.G. 707, C-5

STREET IMPROVEMENT PLANS
TITLE SHEET

LOS ANGELES COUNTY DEPARTMENT OF PUBLIC WORKS

Thienes Engineering, Inc.
CIVIL ENGINEERING • LAND SURVEYING
14349 FIRESTONE BOULEVARD
LA MIRADA, CALIFORNIA 90638
PH.(714)521-4811 FAX(714)521-4173

13545 FLORENCE AVENUE