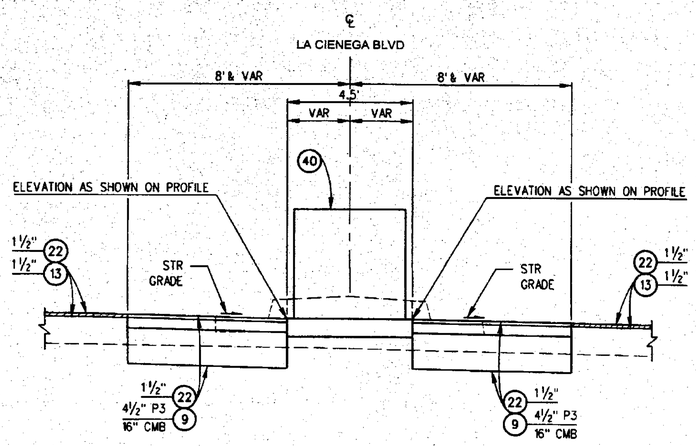

SECTION A - A
STA 12+00 TO 12+31.58
STA 65+35 TO 65+66.58
NOT TO SCALE

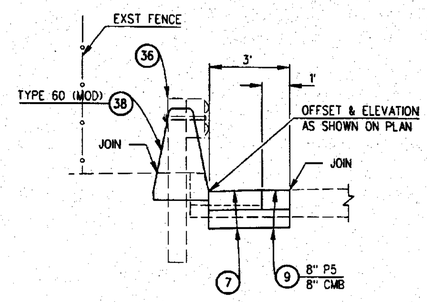

SECTION B - B
STA 10+80 TO 11+12
NOT TO SCALE

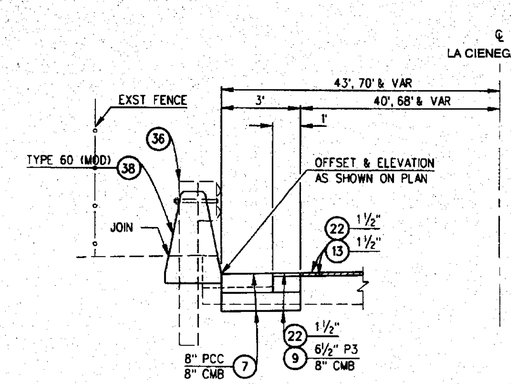

SECTION C - C
STA 11+12 TO 14+70
NOT TO SCALE

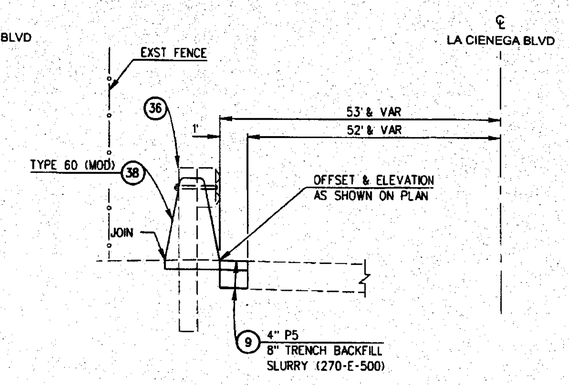

SECTION D - D
STA 14+70 TO 16+05
NOT TO SCALE

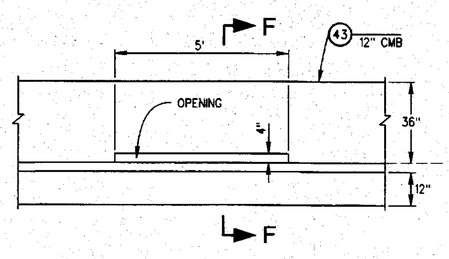

SECTION E - E
NOT TO SCALE

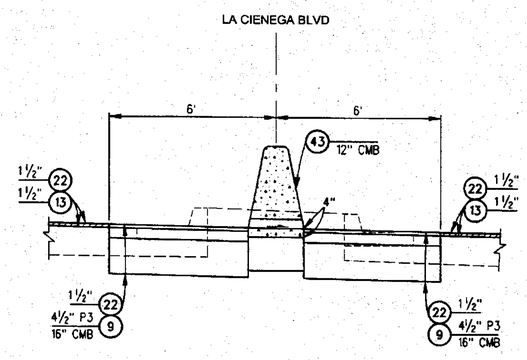

SECTION F - F
NOT TO SCALE

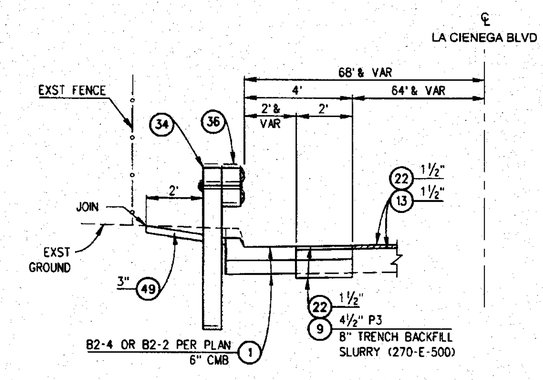

SECTION G - G
STA 41+25 TO 42+32
NOT TO SCALE

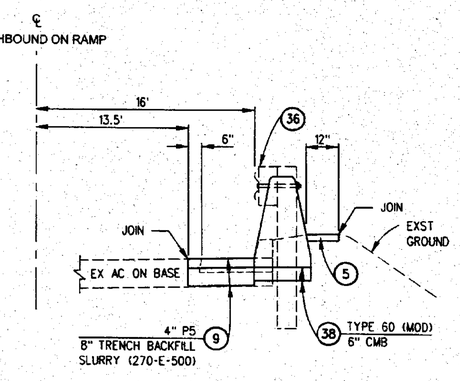

SECTION H - H
STA 7+00 TO 7+35
STA 7+39 TO 7+74
NOT TO SCALE

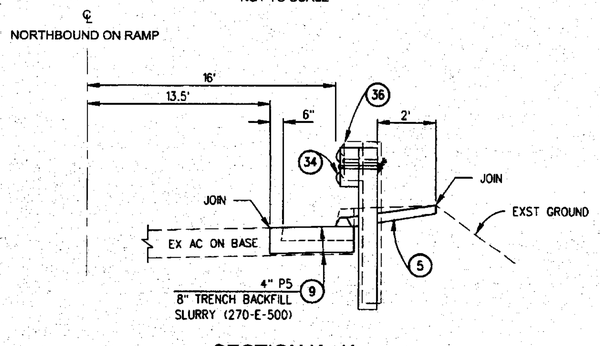

SECTION K - K
STA 5+58.64 TO 7+00
STA 7+74 TO 9+29
NOT TO SCALE

PH079402

DATE	MK	DESCRIPTION
12/15/10	SB	ADDED SECTION U-U
12/15/10	SB	REVISED SECTIONS R-R & S-S
1/10/10	SB	REVISED SHEET "4 OF 19" TO "4 OF 20"
1/10/11	SB	REVISED "PH078943" TO "PH079402"
2/2/11	SB	REVISED SECTION B-B & C-C

REVISIONS

REGISTERED PROFESSIONAL ENGINEER THOMAS HO NO. C60649 EXP. 12/31/10 CIVIL STATE OF CALIFORNIA

PROJECT ENGINEER 7/27/10 DATE

COUNTY OF LOS ANGELES DEPARTMENT OF PUBLIC WORKS

LA CIENEGA BOULEVARD
STOCKER ST TO 1680' S/o SLAUSON AVE
TYPICAL SECTIONS
PROJECT ID NO. RDC0014886

PCA X2201553 | DWG PH079402 | SHEET 4 OF 20

"AS BUILT DRAWINGS"

DRAFTER S. BARBOZA | DESIGNER S. BARBOZA | CHECKER THOMAS HO | CADD PROJECT FILE NAME RDC0014886 | REVIEWED BY | DATE 7/27/10