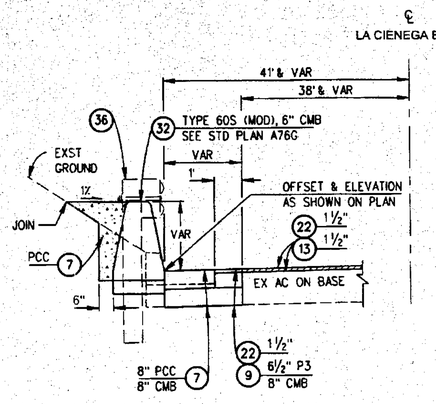

SECTION M - M
STA 47+55 TO 48+03 (NORTHBOUND)
STA 49+15 TO 50+00 (NORTHBOUND)
STA 47+75 TO 48+25 (SOUTHBOUND)
STA 49+34 TO 49+65 (SOUTHBOUND)
NOT TO SCALE

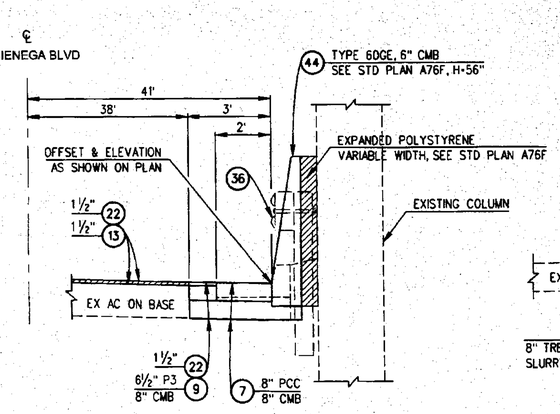

SECTION N - N
STA 48+03 TO 49+15 (NORTHBOUND)
STA 48+25 TO 49+34 (SOUTH BOUND)
NOT TO SCALE

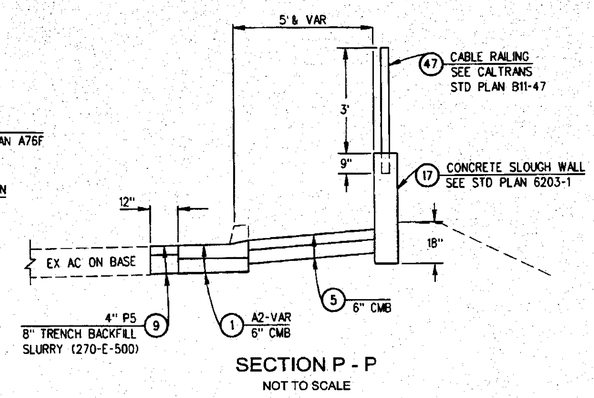

SECTION P - P
NOT TO SCALE

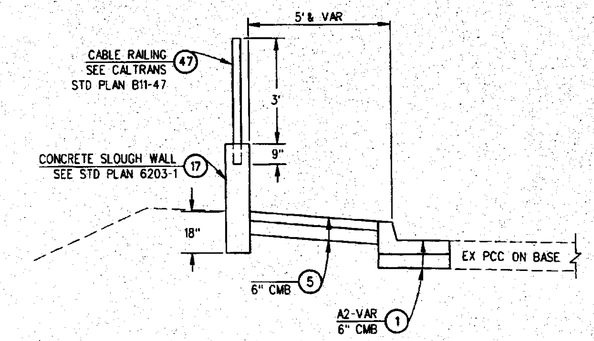

SECTION Q - Q
NOT TO SCALE

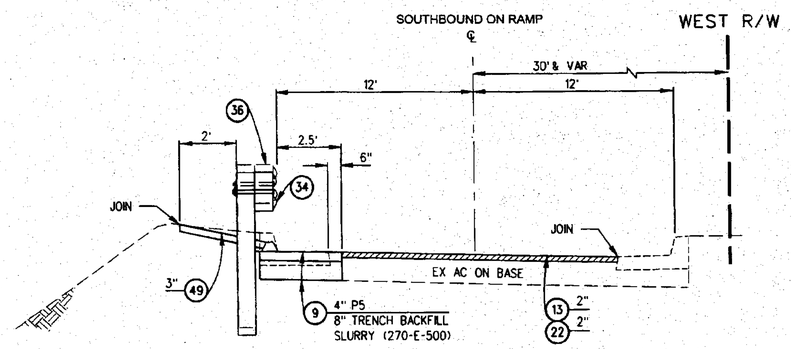

SECTION T - T
LA CIENEGA BLVD (SOUTHBOUND ON RAMP)
NOT TO SCALE

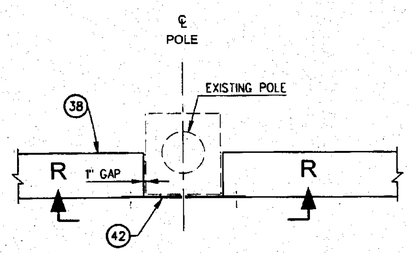

DETAIL "B" SEE SHEET 18
NOT TO SCALE

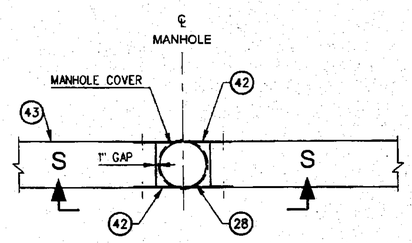

DETAIL "C" SEE SHEET 18
NOT TO SCALE

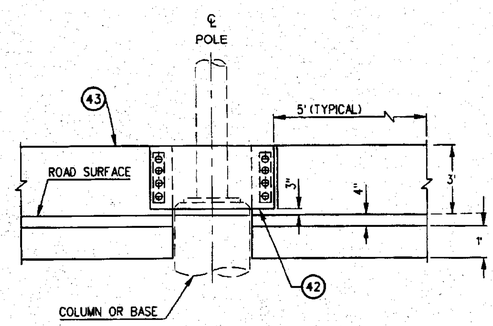

SECTION R - R
NOT TO SCALE

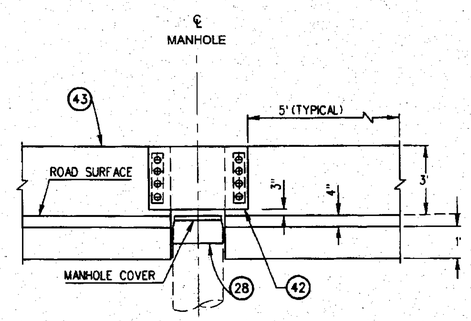

SECTION S - S
NOT TO SCALE

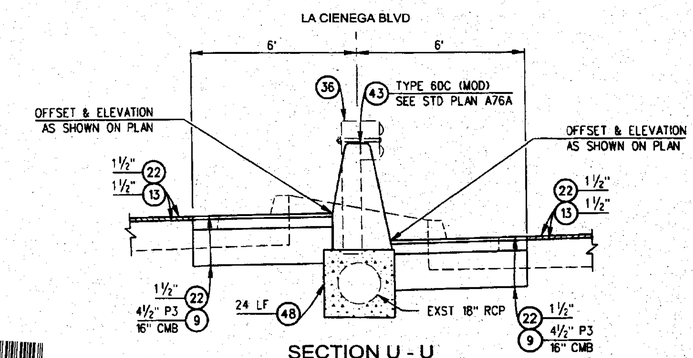

SECTION U - U
STA 52+17 TO 52+41
NOT TO SCALE

PH079403

DATE	MK	DESCRIPTION
12/15/10	SB	ADDED SECTION U-U
12/15/10	SB	REVISED SECTIONS R-R & S-S
1/10/11	SB	REVISED SHEET "5 OF 19" TO "5 OF 20"
1/10/11	SB	REVISED "PH078944" TO "PH079403"
2/2/11	SB	REVISED SECTION M-M & N-N

REVISIONS

REGISTERED PROFESSIONAL ENGINEER
THOMAS HO
NO. C60649
EXP. 12/31/10
CIVIL
STATE OF CALIFORNIA
PROJECT ENGINEER 2/27/10 DATE

COUNTY OF LOS ANGELES DEPARTMENT OF PUBLIC WORKS

LA CIENEGA BOULEVARD
STOCKER ST TO 1680' S/o SLAUSON AVE
TYPICAL SECTIONS
PROJECT ID NO. RDC0014886

PCA X2201553 | DWG PH079403 | SHEET 5 OF 20

DRAFTER S. BARBOZA | DESIGNER S. BARBOZA | CHECKER THOMAS HO | CADD PROJECT FILE NAME RDC0014886 | REVISED BY | DATE

"AS BUILT DRAWINGS"

DATE: 8DATE8 TIME: 8TIME8 FILE: 8FILE8