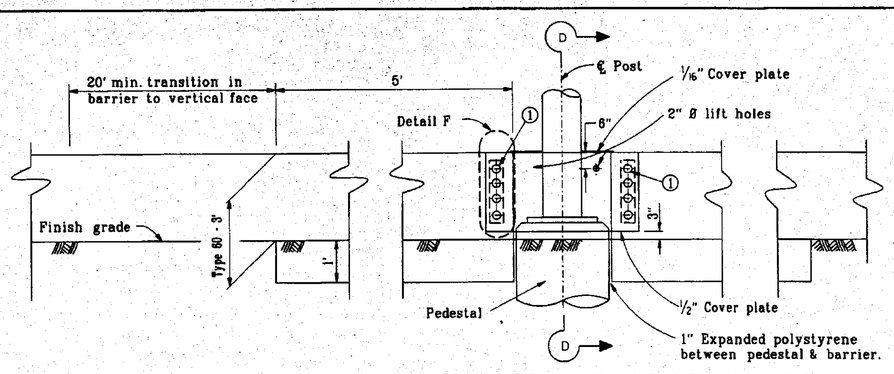

ELEVATION – POWER POLES OR STREET LIGHTS

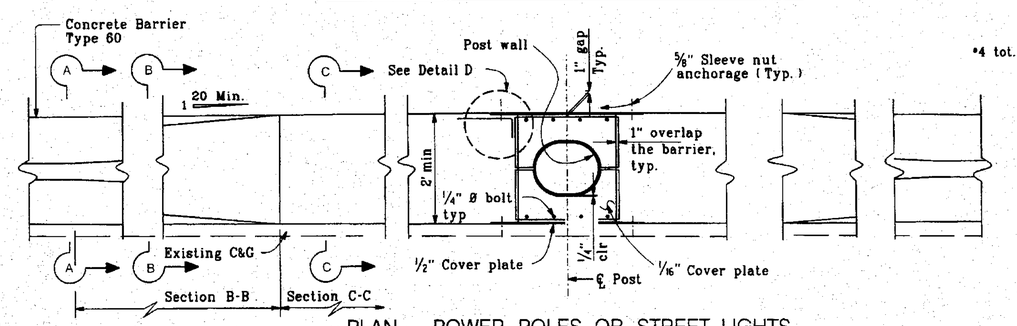

PLAN – POWER POLES OR STREET LIGHTS

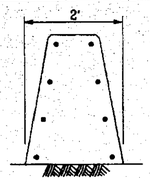

SECTION A-A

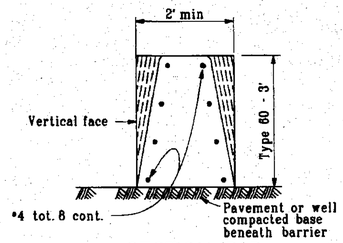

SECTION B-B

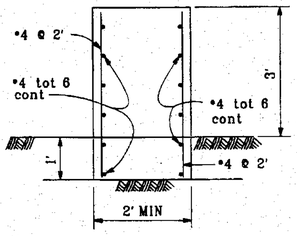

SECTION C-C

① 5/8" Ø Sleeve nut anchorage (See Detail E) or Resin capsule anchorage (See Alternative Anchorage). A total of 8 anchorage units required per plate. All metal plates to be galvanized after fabrication. Hardware to be galvanized or non-corrosive

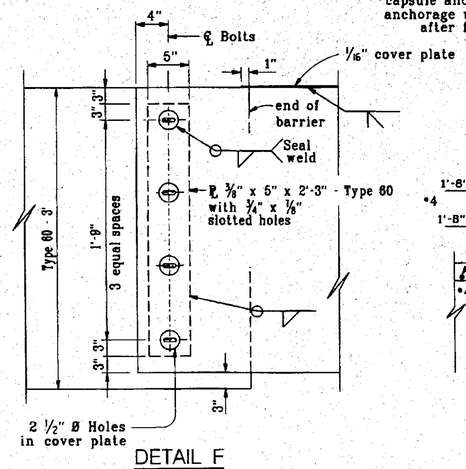

DETAIL F

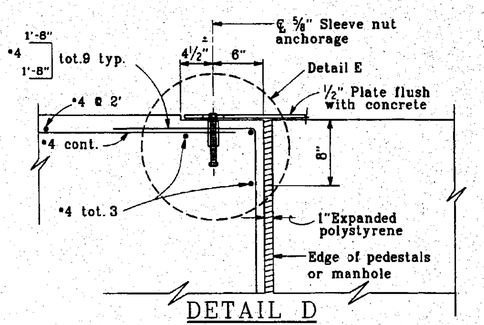

DETAIL D

(1/16" cover plate not shown for clarity)

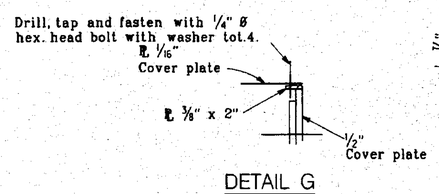

DETAIL G

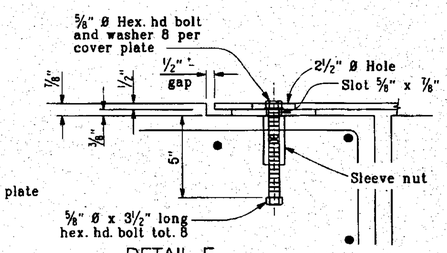

DETAIL E

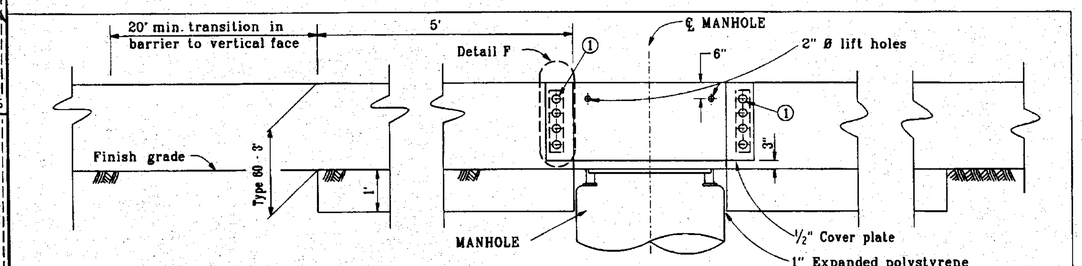

ELEVATION – MANHOLES

(1/16" cover plate not required for manholes)

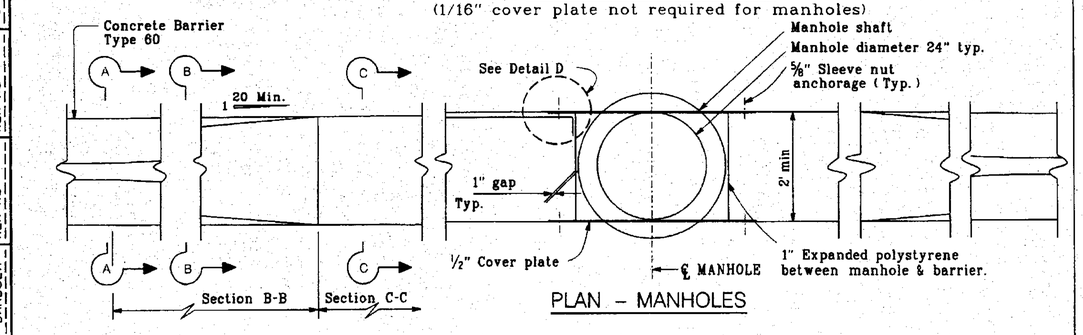

PLAN – MANHOLES

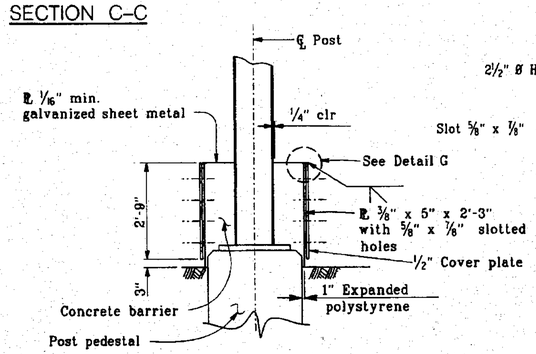

SECTION D-D

Note: Concrete Barrier is symmetrical about ℄ of sign post.

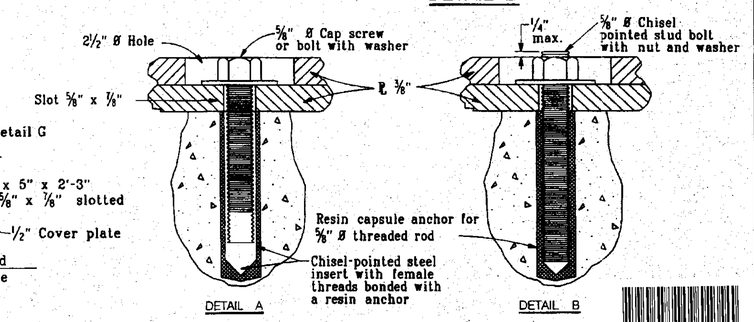

ALTERNATIVE ANCHORAGE

NOTES: 1) Resin capsule anchorage is subject to approval of the Engineer. Installation procedures shall comply with manufacturer's instructions.

2) Detail B similar to Detail A except for anchorage devices.

NO SCALE

PH079416

DATE	MK	DESCRIPTION
1/19/11	SB	ADDED SHEET 18 PER CONSTRUCTION LEGEND #2

REVISIONS

REGISTERED PROFESSIONAL ENGINEER — KENNETH HO — C55234 — EXP. 6/30/12 — CIVIL — STATE OF CALIFORNIA

PROJECT ENGINEER — DATE 1/19/11

COUNTY OF LOS ANGELES DEPARTMENT OF PUBLIC WORKS

LA CIENEGA BOULEVARD
STOCKER ST TO 1,680' S/o SLAUSON AVE
1/2" METAL PLATE DETAILS

PROJECT ID NO. RDC0014886

PCA X2201553 | DWG PH079416 | SHEET 18 OF 20

"AS BUILT DRAWINGS"

DRAFTER S. BARBOZA | DESIGNER KEN HO | CHECKER KEN HO | CADD PROJECT FILE NAME RDC0014886 LA CIENEGA BL | REVIEWED BY | DATE 1/19/11

DATE, BDATE3 TIME, STIME3 FILE, SFILE3