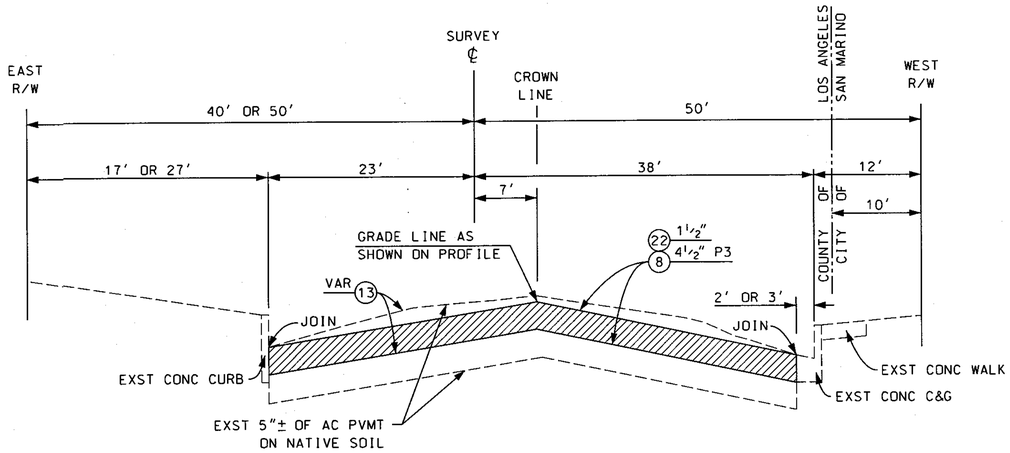

TYPICAL SECTION

NO SCALE

SAN GABRIEL BLVD - STA 106+57 TO STA 124+19

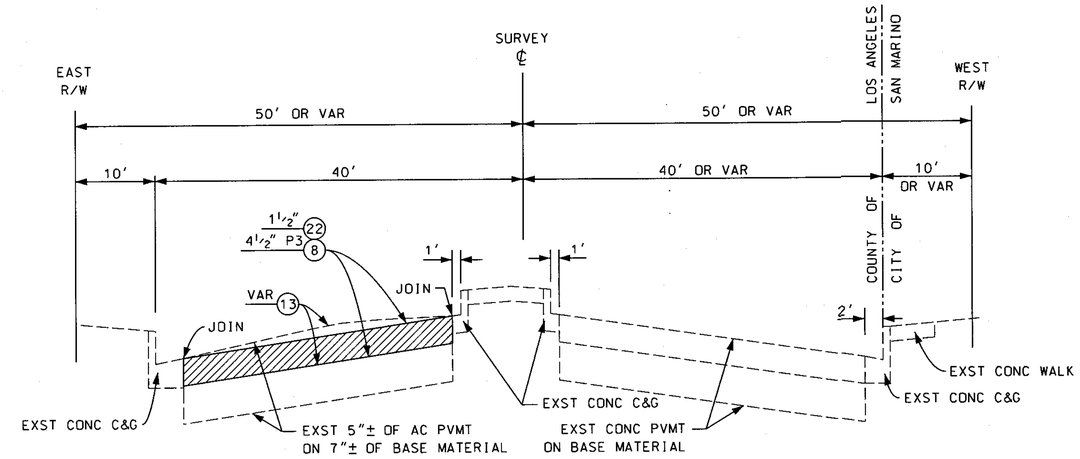

TYPICAL SECTION

NO SCALE

SAN GABRIEL BLVD - STA 128+72 TO STA 130+18

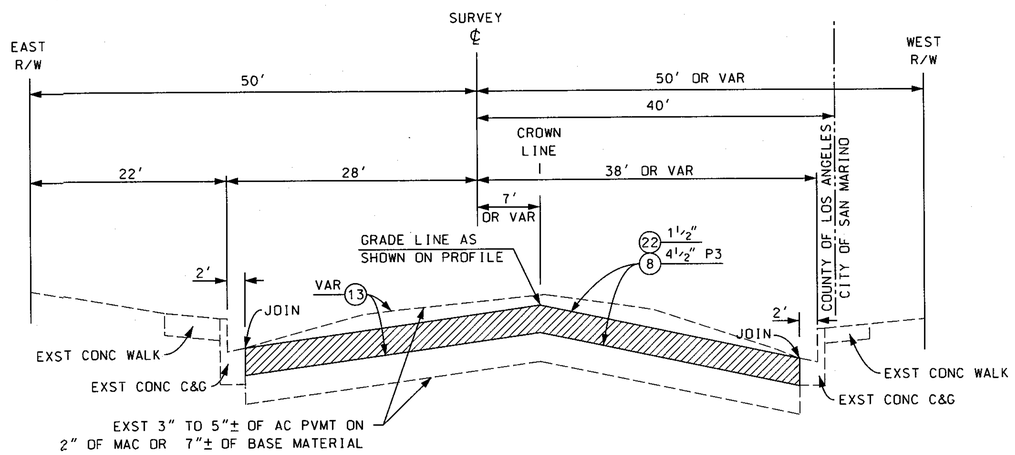

TYPICAL SECTION

NO SCALE

SAN GABRIEL BLVD - STA 100+00 TO STA 105+96

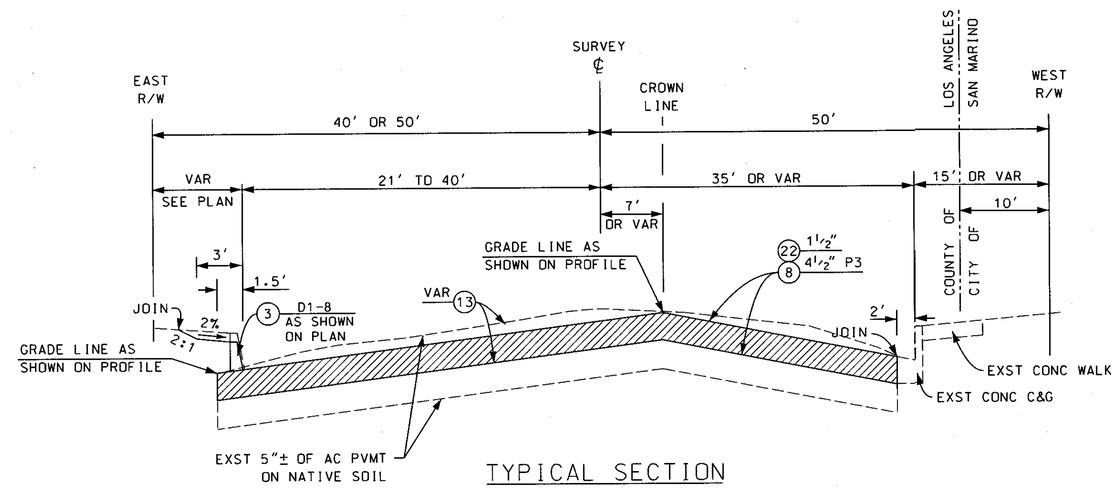

TYPICAL SECTION

NO SCALE

SAN GABRIEL BLVD - STA 125+28 TO STA 127+37

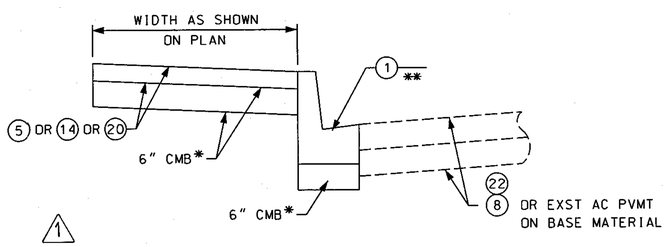

SW AND/OR C&G (RE)CONSTRUCTION SECTION

NO SCALE

* - APPLICABLE FOR SAN GABRIEL BLVD SEGMENT

** - REFER TO TRENCH BACKFILL SLURRY SECTION IF JOINING (1) TO EXST AC PVMT

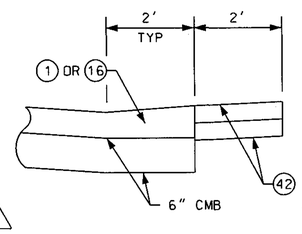

TRENCH BACKFILL SLURRY SECTION

NO SCALE

DATE	MK	DESCRIPTION
8/2/11	2	ADDED T85 SECTION
8/2/11	1	ADDED SW AND OR C&G SECTION

REVISIONS

AS BUILT

REGISTERED PROFESSIONAL ENGINEER GILBERT TSOI 67747 CIVIL STATE OF CALIFORNIA

PROJECT ENGINEER — DATE 1/9/11

PH079569

COUNTY OF LOS ANGELES DEPARTMENT OF PUBLIC WORKS

CALIFORNIA BOULEVARD, ET AL.

TYPICAL SECTIONS

PROJECT ID NO. RDC0012976

PCA X7500145 | DWG | SHEET 4 OF 13

PLAN RD

DRAFTER J. GARCIA | DESIGNER J. GARCIA | CHECKER G. TSOI | CADD PROJECT FILE NAME RDC0012976-PLAN-RD.DGN | REVIEWED BY Jason Ladd | DATE 1/9/11

DATE: 03/21/2011 TIME: 7:15:38 AM FILE: C:##MyFiles#Joe1#PROJECTS#RDC0012976-CALIFORNIA Blvd Et Al#CAD#WORKING ON CAD#RDC0012976 PLAN RD.dgn