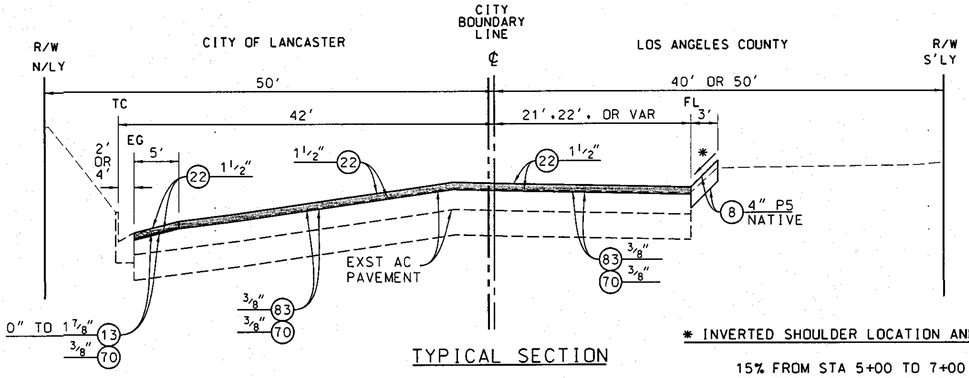

TYPICAL SECTION

STA 17+50 TO 30+33

NO SCALE

* INVERTED SHOULDER LOCATION AND GRADE

15% FROM STA 5+00 TO 7+00
20% FROM STA 7+25 TO 17+00
10% FROM STA 17+25 TO 18+25
20% FROM STA 18+50 TO 22+00
30% FROM STA 22+25 TO 22+67
5% FROM STA 23+15 TO 24+36

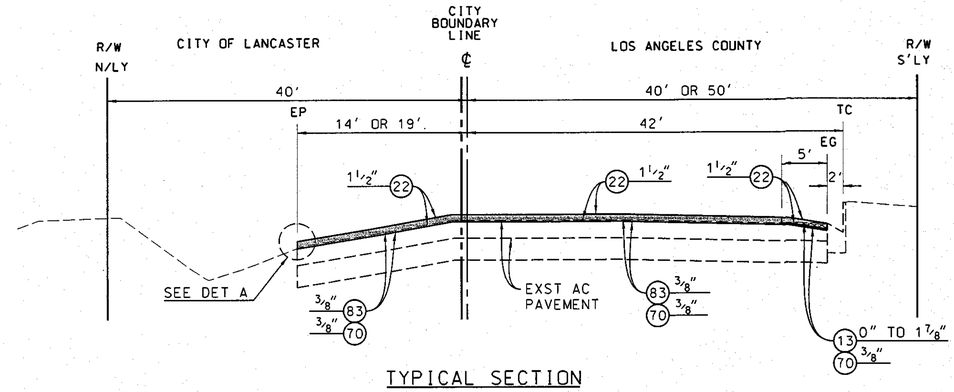

TYPICAL SECTION

STA 33+50 TO 39+25
STA 43+75 TO 46+80

NO SCALE

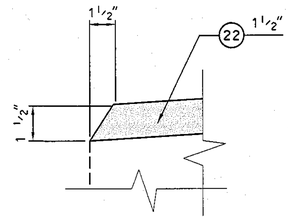

DETAIL "A"

NOT TO SCALE

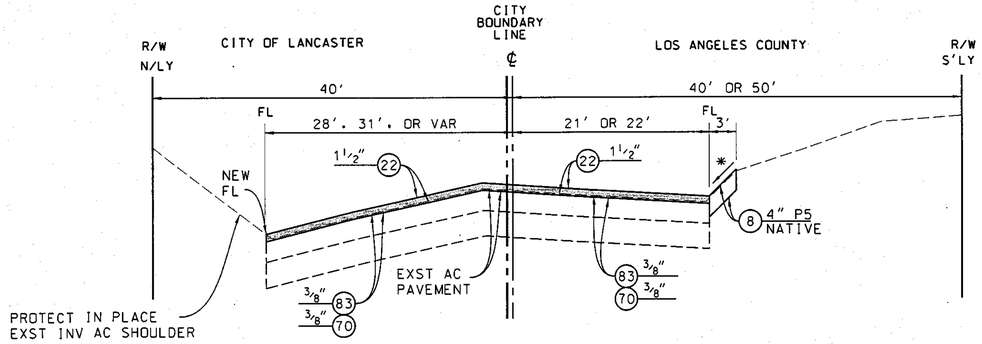

TYPICAL SECTION

STA 4+80.37 TO 17+50

NO SCALE

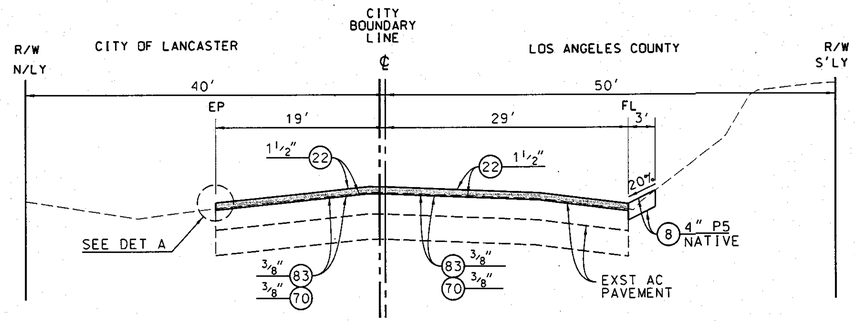

TYPICAL SECTION

STA 31+46.50 TO 33+50

NO SCALE

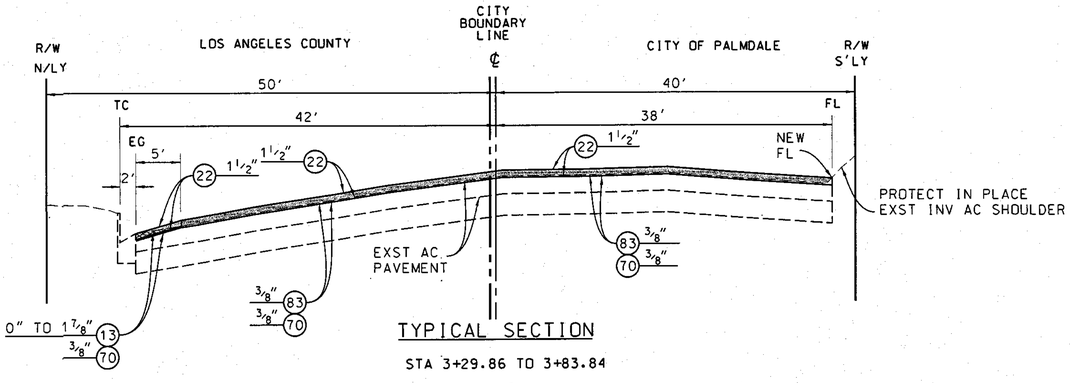

TYPICAL SECTION

STA 3+29.86 TO 3+83.84

NO SCALE

Digout Location			Digout Dimensions			
	LAT	LONG	Depth (in)	Length (ft)	Width (ft)	Area (SF)
North (W/b lane)	34°37' 51.22"	118°12' 34.22"	5	340	12	4080
South (E/b lane)	34°37' 51.22"	118°12' 34.22"	5	25	15	375
North (W/b lane)	34°37' 51.54"	118°12' 28.30"	5	45	8	360
North (W/b lane)	34°37' 51.54"	118°12' 28.30"	5	90	4	360
North (W/b lane)	34°37' 51.60"	118°12' 14.73"	5	140	15	2100
South(E/b lane)	34°37' 51.44"	118°12' 14.37"	5	200	15	3000
North (W/b lane)	34°37' 51.73"	118°12' 12.21"	5	100	15	1500
South (E/b lane)	34°37' 51.73"	118°12' 12.21"	5	15	20	300
South (E/b lane)	34°37' 51.46"	118°12' 9.51"	5	475	10	4750
North (W/b lane)	34°37' 51.66"	118°12' 4.42"	5	125	15	1875
North (W/b lane)	34°37' 51.67"	118°11' 57.88"	5	250	4	1000
North (W/b lane)	34°37' 51.70"	118°11' 56.13"	5	100	12	1200
North (W/b lane) & South (E/b lane)	34°37' 51.70"	118°11' 54.82"	5	50	12	600
North (W/b lane)	34°37' 51.86"	118°11' 38.45"	5	100	12	1200
South(E/b lane)	34°37' 51.72"	118°11' 38.47"	5	125	12	1500
South (E/b lane)	34° 37' 51.73"	118°11' 27.33"	5	70	12	840
North (W/b lane)	34°37' 51.73"	118°11' 27.33"	5	100	12	1200
					TOTAL	26,240

DIGOUT TABLE

LOCATIONS OF DIGOUTS WILL BE MARKED ON THE PAVEMENT
BY ROAD MAINTENANCE DIVISION (RMD) PRIOR TO CONSTRUCTION.
CONTACT PAUL FUNK OF RMD AT (661)-272-0817.

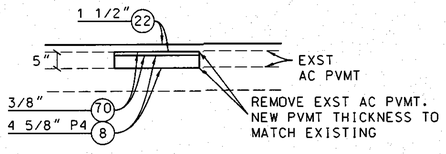

DIGOUT TYPICAL SECTION

NO SCALE

AS BUILT

PH080053

DATE	MK	DESCRIPTION

REVISIONS

REGISTERED PROFESSIONAL ENGINEER
VICTAIRE LLANA
No. 63954
CIVIL
STATE OF CALIFORNIA

PROJECT ENGINEER — DATE 8/9/11

COUNTY OF LOS ANGELES DEPARTMENT OF PUBLIC WORKS

AVENUE N

TYPICAL SECTIONS

PROJECT ID NO. RDC0015741

PCA X2501847 | DWG PH080053 | SHEET 3 OF 8

PS-CH 07/05

DRAFTER EM | DESIGNER EM | CHECKER V. LLANA | CADD PROJECT FILE NAME RDC0015741.DGN, SHT 3 | REVIEWED BY — DATE 8/9/11

PROPOSED FOR CONSTRUCTION: — DATE | ADVERTISED: — DATE | AS BUILT: — DATE

DATE: $DATE$ TIME: $TIME$ FILE: $FILE$