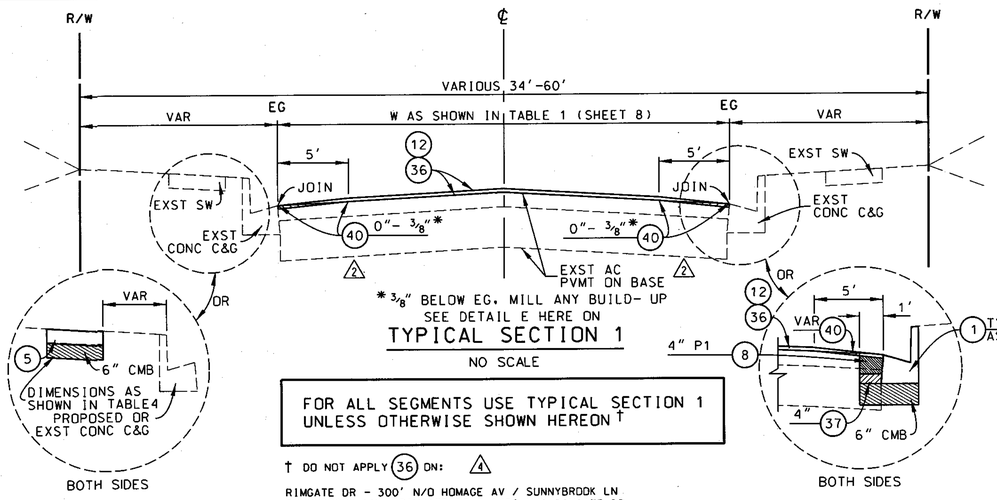

TYPICAL SECTION 1

NO SCALE

FOR ALL SEGMENTS USE TYPICAL SECTION 1 UNLESS OTHERWISE SHOWN HEREON †

† DO NOT APPLY (36) ON: (4)

RIMGATE DR - 300' N/O HOMAGE AV / SUNNYBROOK LN
SUNNYBROOK LN - RIMGATE DR / 145' N/O RIMGATE DR

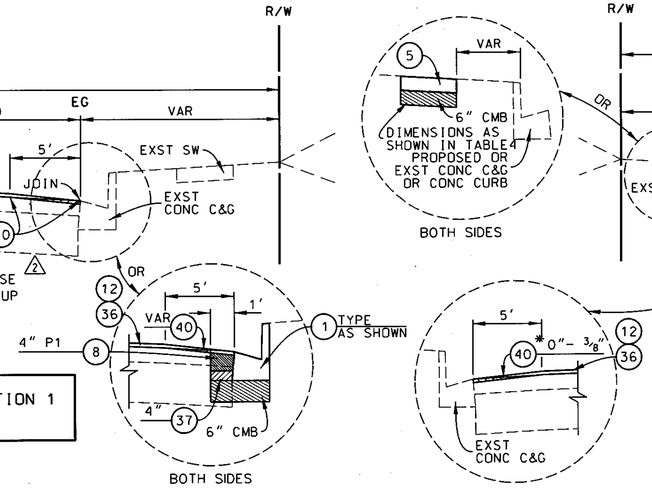

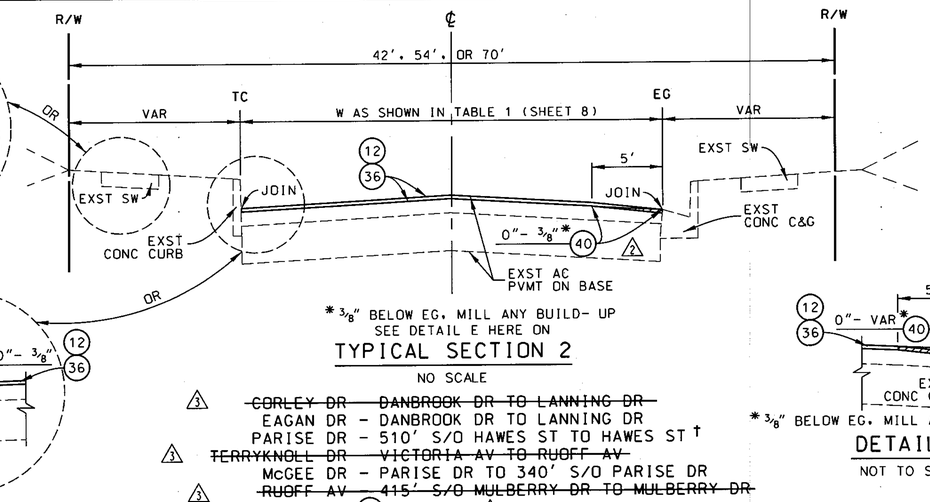

TYPICAL SECTION 2

NO SCALE

(3) ~~CORLEY DR - DANBROOK DR TO LANNING DR~~
EAGAN DR - DANBROOK DR TO LANNING DR
PARISE DR - 510' S/O HAWES ST TO HAWES ST †
(3) ~~TERRYKNOLL DR - VICTORIA AV TO RUOFF AV~~
McGEE DR - PARISE DR TO 340' S/O PARISE DR
(3) ~~RUOFF AV - 415' S/O MULBERRY DR TO MULBERRY DR~~

† DO NOT APPLY (36) ON PARISE DR (4)

DETAIL E

NOT TO SCALE

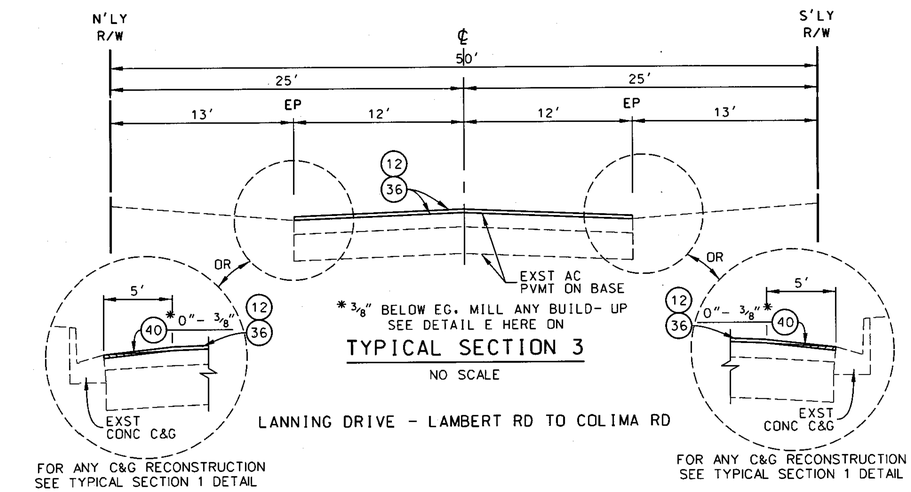

TYPICAL SECTION 3

NO SCALE

LANNING DRIVE - LAMBERT RD TO COLIMA RD

FOR ANY C&G RECONSTRUCTION SEE TYPICAL SECTION 1 DETAIL

FOR ANY C&G RECONSTRUCTION SEE TYPICAL SECTION 1 DETAIL

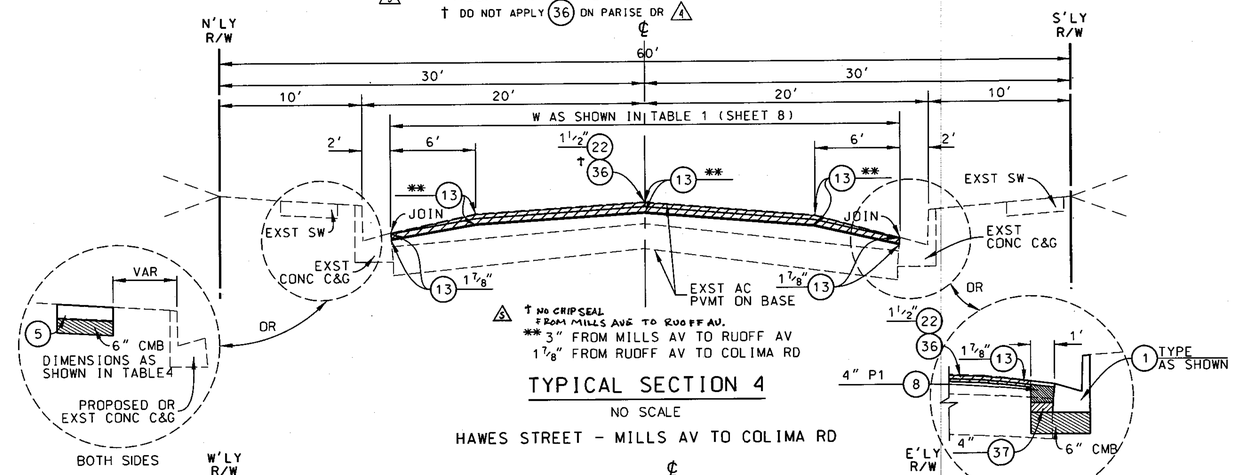

(5) † NO CHIPSEAL FROM MILLS AVE TO RUOFF AV.
** 3" FROM MILLS AV TO RUOFF AV
1 7/8" FROM RUOFF AV TO COLIMA RD

TYPICAL SECTION 4

NO SCALE

HAWES STREET - MILLS AV TO COLIMA RD

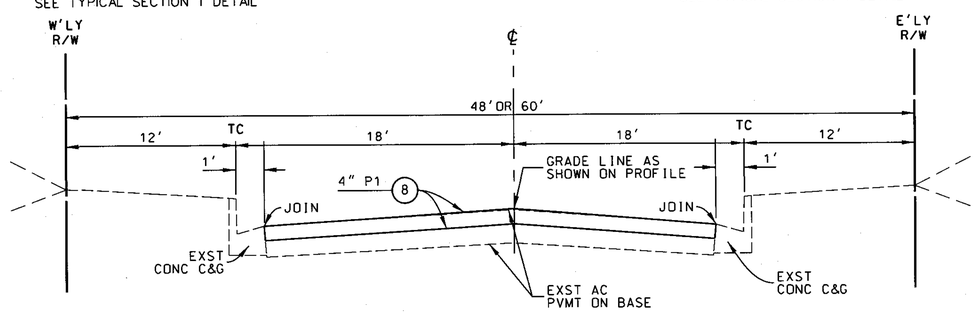

TYPICAL SECTION 5

NO SCALE

VICTORIA AVENUE - MULBERRY DR TO HAWES ST

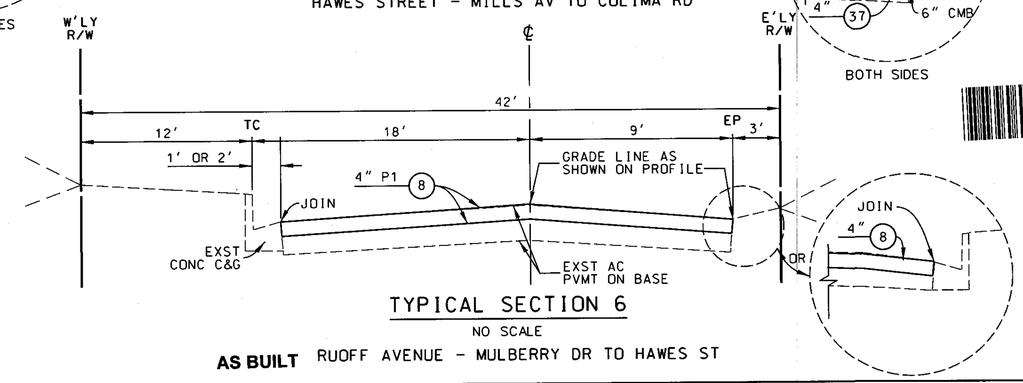

TYPICAL SECTION 6

NO SCALE

AS BUILT RUOFF AVENUE - MULBERRY DR TO HAWES ST

FOR C&G RECONSTRUCTION INFORMATION SEE TABLE 3 ON SHEET 9

FOR SIDEWALK RECONSTRUCTION INFORMATION SEE TABLE 4 ON SHEET 10

DATE	MK	DESCRIPTION
3/5/12	(5)	AS-BUILT
9/14/11	(4)	REVISE SECTIONS PER GMED'S REQUEST
9/12/11	(3)	DELETE SEGMENTS PER GMED'S REQUEST
01-04-11	(2)	CHANGED (13) TO (40)

REVISIONS

REGISTERED PROFESSIONAL ENGINEER — M. ORELLANA — NO. C62045 — EXP. 09/30/11 — CIVIL — STATE OF CALIFORNIA

PROJECT ENGINEER — 9-28-10 DATE

COUNTY OF LOS ANGELES DEPARTMENT OF PUBLIC WORKS

HAWES STREET ET AL.

TYPICAL SECTIONS

PROJECT ID NO. RDC0015261

PCA | DWG | SHEET 3 OF 12

PS-CH 08/03

PH081020

DRAFTER J. DIFRANCESCO | DESIGNER J. DIFRANCESCO | CHECKER M. ORELLANA | CADD PROJECT FILE NAME RDC0015261-PLAN-RD.DGN | REVIEWED BY | DATE

DATE: $DATE$ TIME: $TIME$ FILE: $FILEL$