SEGMENT	LIMITS	HOUSE NUMBER	L (FT)	W (FT)	5 (SF)
CORLEY DRIVE	DUNTON DR TO 450' N/O DUNTON DR	10513	4	4	16
		10514	18	4	72
		10529	4	4	16
		10539	8	4	32
DANBROOK DRIVE	130' W/O PARISE DR TO COLIMA RD	14700	20	4	80
		14736	8	4	32
		14802	20	4	80
		14808	8	4	32
DUNTON DRIVE	VALLEY VIEW AV TO COLIMA RD	10543 CORLEY DR	16	4	64
		14724	28	4	112
		14743	4	4	16
GLENN DRIVE	VALLEY VIEW AV TO 230' S/O EAGAN DR	14705	25	4	100
		14732	16	4	64
		14747	32	4	128
		14807	8	4	32
HAWES STREET	MILLS AVE TO COLIMA DR	10503 PARISE DR	16	4	64
		14408	6	10	60
		14460	13	5	65
		14628	10	4	40
		14707	35	9	315
		14711	18	4	72
		9920 MILLS AVE (ON HAWES ST)	9	9	81
		18' W/O PP# 978313E	14	4	56
LANNING DRIVE	LAMBERT RD TO COLIMA RD	ACROSS FROM 14876	30	10	300
			30	10	300
			15	5	75
MCGEE DRIVE	PARISE DR TO 340' S/O PARISE DR	14608	18	4	72
		14602	8	4	32
		14614	24	6	144
		14615	8	4	32
		14618	8	4	32
		14621	8	4	32
		14624	16	6	96
		14630	27	4	108
		14634	34	4	136
		14635	4	4	16
PARISE DRIVE	HAWES ST TO 740' S/O HAWES ST	10537	4	4	16
		10568	8	4	32
RIMGATE DRIVE	300' W/O HOMAGE AVE TO SUNNYBROOK LN	14504	8	4	32
		14511	4	4	16
		14550	8	4	32
		14551	8	4	32
		10240 HOMAGE AV	8	4	32
SUNNYBROOK LANE	RIMGATE DR TO 145' N/O RIMGATE DR	10334	4	4	16
VALLEY VIEW AVE	GLENN DR TO HAWES ST	10425	6	4	24
		14676 DUNTON DR	8	4	32
TERRYKNOLL DRIVE	VICTORIA AVE TO RUOFF AVE	14361	29	4	116
		14367	22	4	88
		14368	18	4	72
		14372	4	4	16
		14383	18	4	72
		14393	8	4	32
		14419	22	4	88
		14420	28	4	112
		14426	15	4	60

TABLE 4

SIDEWALK

SEGMENT	LIMITS	HOUSE NUMBER	L (FT)	W (FT)	5 (SF)
REGATTA AVE	510' S/O MULBERRY DR TO MULBERRY DR	10121	9	4	36
		10133	22	4	88
		10145	8	4	32
		10145	5	4	20
		10134	5	4	20
		10128	4	3	12
		10128	31	4	124
RUOFF AVENUE	415' S/O MULBERRY DR TO MULBERRY DR	10227	7	5	35

TABLE 4 -CONT-

SIDEWALK

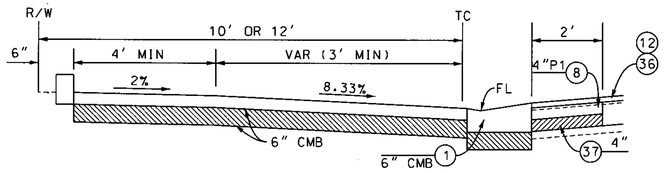

TYPICAL CURB RAMP CONST.

SECTION B-B

NO SCALE

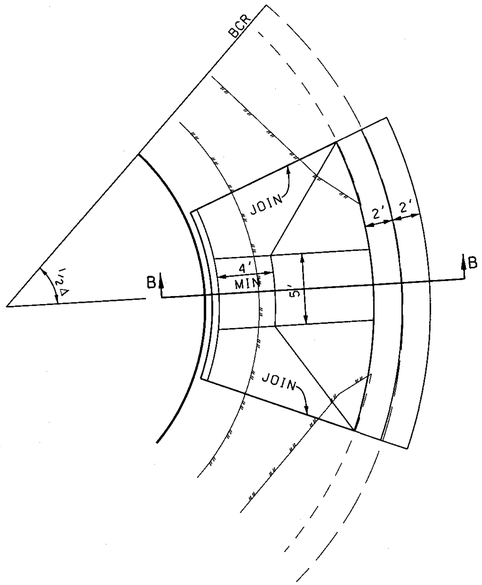

TYPICAL CURB RAMP CONST

DETAIL B

NO SCALE

MAIN STREET	CROSS STREET	CORNER	20 (SF)	DETAIL	CASE	SECTION	38 (SF)	1 (LF)
BONAVISTA LANE	LAMBERT ROAD	SW	200	B	B	B-B	15	21
BONAVISTA LANE	LAMBERT ROAD	SE	200	B	B	B-B	15	21
DANBROOK DRIVE	COLIMA ROAD	NW	200	B	B	B-B	15	21
DANBROOK DRIVE	COLIMA ROAD	SW	*	-	-	--	15	--
DANBROOK DRIVE	PARISE DRIVE	NE	200	B	B	B-B	15	21
DANBROOK DRIVE	PARISE DRIVE	SE	200	B	B	B-B	15	21
DANBROOK DRIVE	PARISE DRIVE	SW	200	B	B	B-B	15	21
DUNTON DRIVE	COLIMA ROAD	NE	200	B	B	B-B	15	21
DUNTON DRIVE	COLIMA ROAD	NW	200	B	B	B-B	15	21
DUNTON DRIVE	COLIMA ROAD	SE	200	B	B	B-B	15	21
DUNTON DRIVE	COLIMA ROAD	SW	200	B	B	B-B	15	21
DUNTON DRIVE	CORLEY DRIVE	NE	200	B	B	B-B	15	21
DUNTON DRIVE	CORLEY DRIVE	NW	200	B	B	B-B	15	21
DUNTON DRIVE	CORLEY DRIVE	HN 14690	200	B	B	B-B	15	21
HAWES STREET	HOMAGE AVENUE	SW	--	-	-	--	15	--
HAWES STREET	N PARISE DRIVE	NE	200	B	B	B-B	15	21
HAWES STREET	N PARISE DRIVE	NW	200	B	B	B-B	15	21
HAWES STREET	S PARISE DRIVE	SE	--	-	-	--	15	--
HAWES STREET	S PARISE DRIVE	SW	--	-	-	--	15	--
HAWES STREET	S PARISE DRIVE	ACROSS 14608 (ON HAWES ST)	--	-	-	--	15	--
HAWES STREET	WHITTIER UNION HIGH SCHOOL WESTERLY DRIVEWAY	NE	200	B	CM	--	15	21
HAWES STREET	WHITTIER UNION HIGH SCHOOL WESTERLY DRIVEWAY	NW	200	B	CM	--	15	21
PARISE DRIVE	MCGEE DRIVE	SE	--	--	--	--	15	--
PARISE DRIVE	MCGEE DRIVE	NE	--	--	--	--	15	--
REGATTA AVENUE	MULBERRY DRIVE	SW	--	--	--	--	15	--
REGATTA AVENUE	MULBERRY DRIVE	SE	--	--	--	--	15	--
RIMGATE DRIVE	HOMAGE AVENUE	NW	--	--	--	--	15	--
RIMGATE DRIVE	HOMAGE AVENUE	NE	--	--	--	--	15	--
TERRYKNOLL DRIVE	COLIMA ROAD	SW	200	B	B	B-B	15	21
TERRYKNOLL DRIVE	COLIMA ROAD	NW	200	B	B	B-B	15	21

TABLE 5

CURB RAMPS

* GRIND FL LIP FLUSH WITH RAMP

PH081027

AS BUILT

DATE	MK	DESCRIPTION

REVISIONS

REGISTERED PROFESSIONAL ENGINEER — M. ORELLANA — NO. C62045 — EXP. 09/30/11 — CIVIL — STATE OF CALIFORNIA

PROJECT ENGINEER — DATE 9-28-10

COUNTY OF LOS ANGELES DEPARTMENT OF PUBLIC WORKS

HAWES STREET ET AL.

CONCRETE IMPROVEMENT TABLES

PROJECT ID NO. RDC0015261

PCA | DWG | SHEET 10 OF 12

PS-DH 06/05

DRAFTER J. DIFRANCESCO | DESIGNER J. DIFRANCESCO | CHECKER M. ORELLANA | CADD PROJECT FILE NAME RDC0015261-PLAN-RD.DGN | REVIEWED BY | DATE

DATE: $DATE$ TIME: $TIME$ FILE: $FILEL$