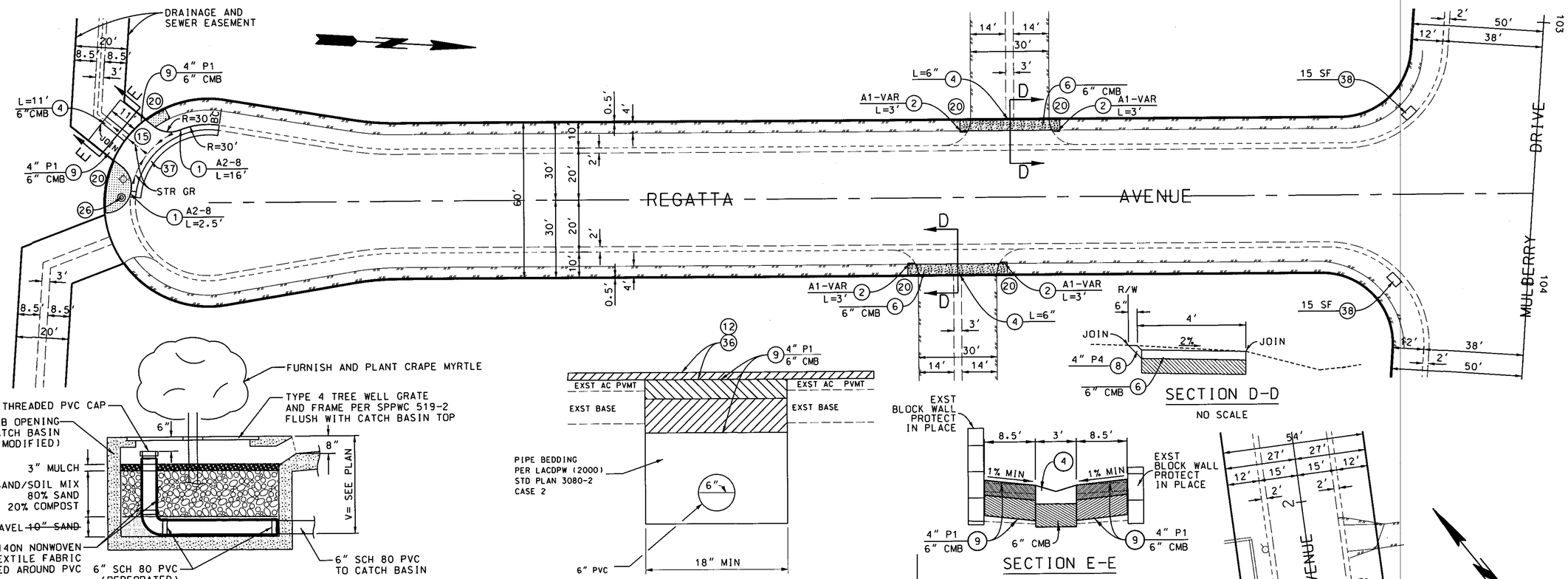

BENCH MARK PT 3
PWLB 0928 PAGE 731
(SANTA FE 2000)
SPK & T ℄ INT. OF DANBROOK DR (W') AND CERES AVE.
ELEVATION = 183.33

FOR WORK NOT SHOWN HEREON SEE SHEETS 3,8,9,10, AND 11

AS-BUILT

DATE	MK	DESCRIPTION
3/5/2012	1	AS-BUILT

REVISIONS

REGISTERED PROFESSIONAL ENGINEER M. ORELLANA NO. C62045 EXP. 09/30/11 CIVIL STATE OF CALIFORNIA

PROJECT ENGINEER 4-28-10 DATE

COUNTY OF LOS ANGELES DEPARTMENT OF PUBLIC WORKS

HAWES STREET ET AL.

CONSTRUCTION DETAILS

PROJECT ID NO. RDC0015261

PCA | DWG | SHEET 12 OF 12

DRAFTER	DESIGNER	CHECKER	CADD PROJECT FILE NAME	REVIEWED BY	DATE
J. DIFRANCESCO	J. DIFRANCESCO	M. ORELLANA	RDC0015261-PLAN-RD.DGN		

DATE. $DATE$ TIME. $TIME$ FILE. $FILENL$