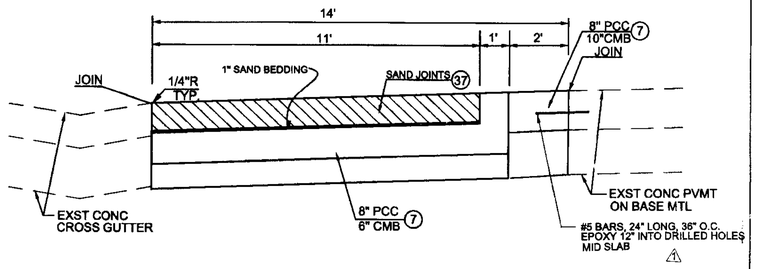

SECTION H-H

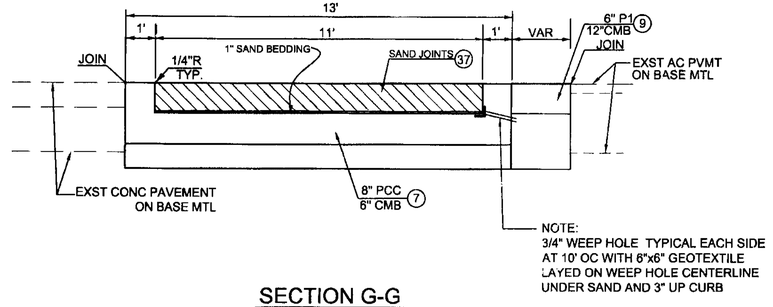

SECTION G-G

TYPICAL TRANSVERSE DECORATIVE CROSSWALK SECTION | SCALE NTS | 2

TYPICAL TRANSVERSE DECORATIVE CROSSWALK SECTION | SCALE NTS | 1

REVIEWED BY
LACDPW DESIGN DIVISION — DATE 3/11/10

CURB RETURN ELEVATIONS

CURB #	BCR	1/4 Δ	1/2 Δ	3/4 Δ	ECR
(A)	(154.60TC) (153.93FL)	154.63TC 153.96FL	154.66TC 153.99FL	154.68TC 154.01FL	(154.70TC) (154.04FL)
(B)	(154.78TC) (154.09FL)	154.81TC 154.14FL	154.86TC 154.19FL	154.90TC 154.23FL	(154.94TC) (154.29FL)
(C)	(154.65TC) (153.89FL)	154.56TC 153.84FL	154.45TC 153.78FL	154.22TC 153.72FL	(154.08TC) (153.66FL)
(D)	(154.63TC) (154.10FL)	154.54TC 154.04FL	154.28TC 153.98FL	154.42TC 153.92FL	- -
(E)	(154.83TC) (154.08FL)	154.72TC 154.01FL	154.60TC 153.93FL	154.52TC 153.85FL	(154.38TC) (153.78FL)
(F)	(154.96TC) (154.32FL)	154.89TC 154.22FL	154.78TC 154.11FL	154.68TC 154.01FL	(154.39TC) (153.90FL)

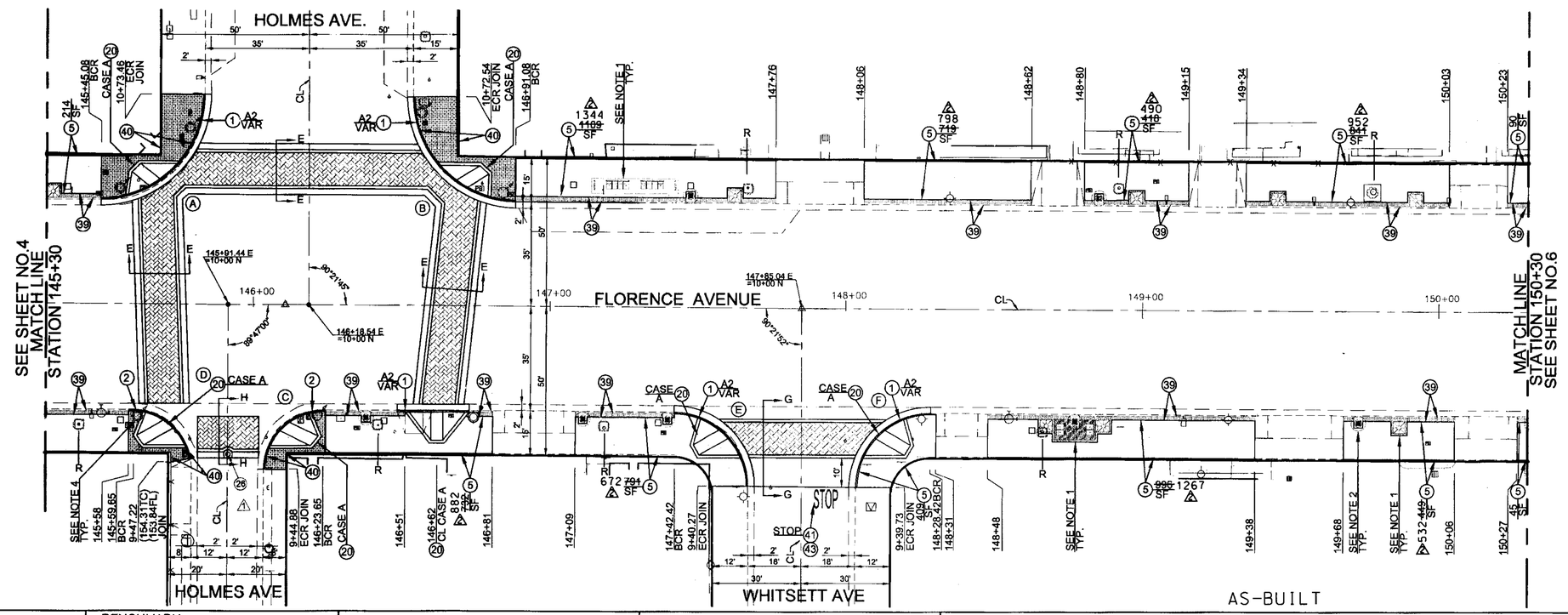

PH082437

PLAN
SCALE: 1"=20'

NOTES:
1. SEE PLAN LS FOR LANDSCAPING IMPROVEMENTS.
2. SEE PLAN EE FOR PEDESTRAIN LIGHTING IMPROVEMENTS.
3. SEE PLAN GS FOR SIGN IMPROVEMENTS.
4. SEE PLAN TS FOR TRAFFIC SIGNAL IMPROVEMENTS.
5. SEE PLAN SE FOR STRUCTURAL IMPROVEMENTS FOR GATEWAY SIGNS.
6. PROTECT IN PLACE ALL APPURTENANT DRAINAGE STRUCTURE.
7. SEE SHEET 2 FOR SECTION E–E AND F–F.
8. SEE SHEET 5 FOR SECTION G–G AND H–H.

BENCHMARK
VERT. DATUM=NAVD.88
WATTS 2000ADJ.
PT #200 PWLB 1021–6784
MAG NAIL & DPW ⊙ CL
FLORENCE AVE ±10' W/
HOLMES AVE N
EL=155.36

ASHBA 7876
ENGINEERS LIMITED
POST OFFICE BOX 90833
LONG BEACH
CALIFORNIA 90809
(562) 989-9154

CURVE DATA

CURB	RADIUS (FT)	CENTRAL ANGLE DEG.	MIN.	SEC.	LENGTH (FT)	TANGENT (FT)
(A)	38	90	21	45	59.93	38.24
(B)	38	89	38	15	59.45	37.76
(C)	20	90	13	0	31.49	20.08
(D)	20	89	47	0	31.34	19.92

CURVE DATA

CURB	RADIUS (FT)	CENTRAL ANGLE DEG.	MIN.	SEC.	LENGTH (FT)	TANGENT (FT)
(E)	25	89	38	8	39.11	24.84
(F)	25	90	21	52	39.43	25.16
(G)						
(H)						

DATE	MK	DESCRIPTION
04/02/13	2	AS-BUILT
6/17/10	1	ADDED DOWEL INFORMATION AND (26)

REVISIONS

REGISTERED PROFESSIONAL ENGINEER BARBARA J. KISH No. 31417 Expires 12-31-10 CIVIL STATE OF CALIFORNIA
3/10/10
PROJECT ENGINEER — DATE

FLORENCE AVENUE STREET IMPROVEMENTS - STATION 145+30 TO 150+30

COUNTY OF LOS ANGELES DEPARTMENT OF PUBLIC WORKS

FLORENCE AVENUE STREETSCAPE IMPROVEMENTS, PHASE 2

CONSTRUCTION PLAN
PROJECT ID NO. RDC0015121

PROJ ID. RDC0015121 | PCA X2101559 | SHEET 5 OF 17

PLAN RD

DRAFTER AN | DESIGNER BA | CHECKER BA | CADD PROJECT FILE NAME 7876-PH2-12-25 ST IMPRVMENT.DWG | REVIEWED BY | DATE

P:\7000-OFFICE\8000\7876FLRNCAV\WORKING\PHASE 2 ----------\7876-PH2-12-25 ST IMPRVMENT.DWG Plot date: 3/10/2010 9:25 AM Plotted by: Al Nozaki