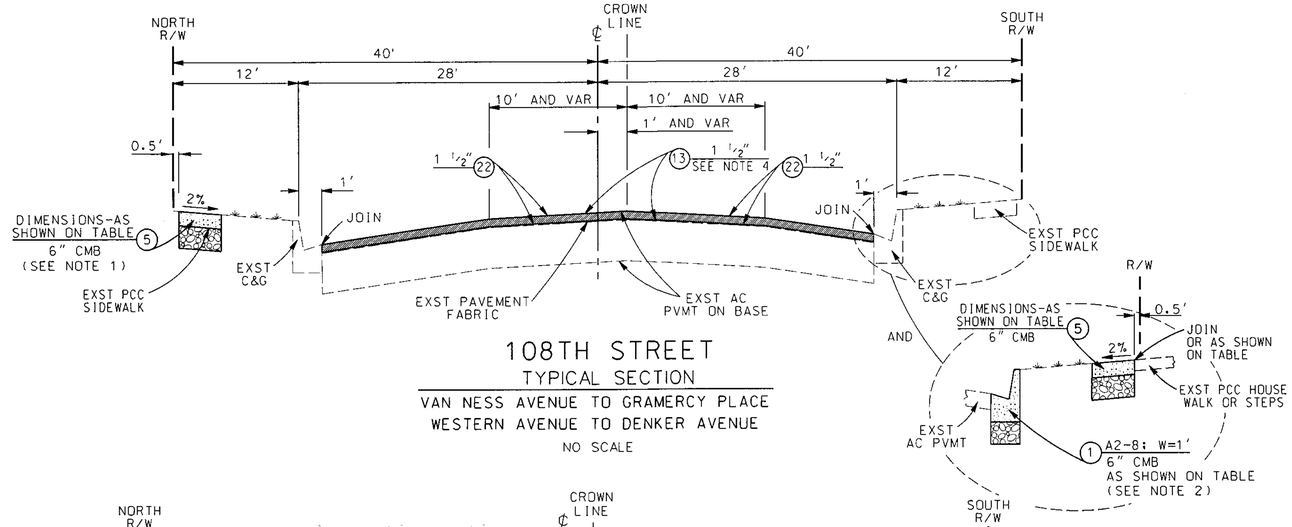

108TH STREET
TYPICAL SECTION

VAN NESS AVENUE TO GRAMERCY PLACE
WESTERN AVENUE TO DENKER AVENUE

NO SCALE

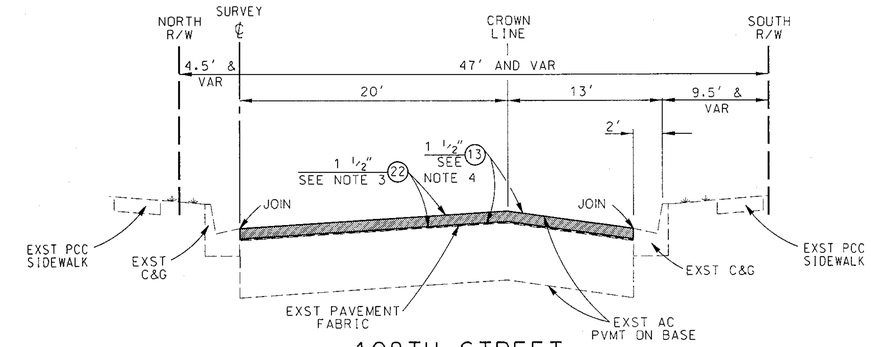

108TH STREET
TYPICAL SECTION

700 FEET W/O VERMONT AVENUE TO 56 FEET W/O VERMONT AVENUE

NO SCALE

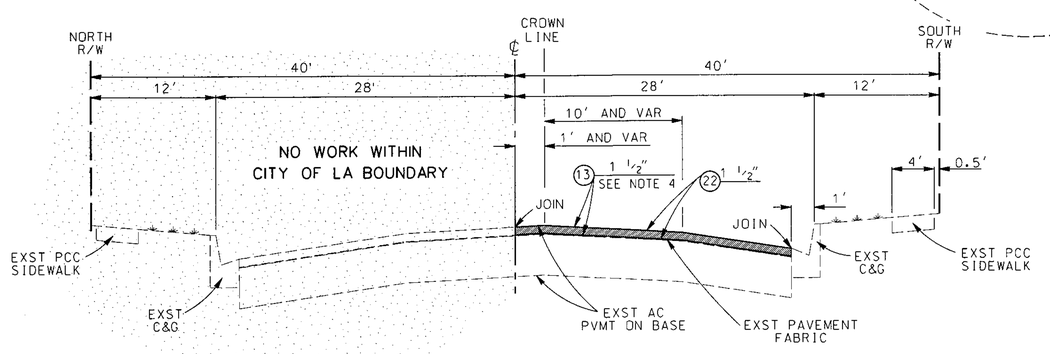

108TH STREET
TYPICAL SECTION

GRAMERCY PLACE TO WESTERN AVENUE

NO SCALE

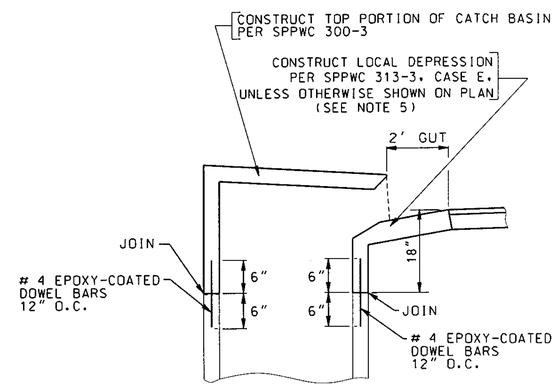

DETAIL D
CATCH BASIN TOP RECONSTRUCTION

NO SCALE

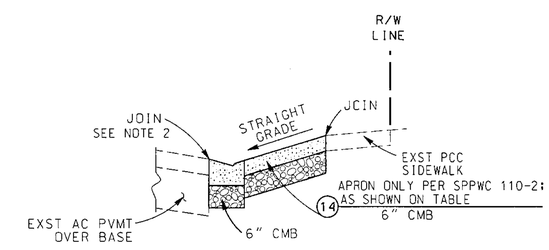

DRIVEWAY APRON RECONSTRUCTION DETAIL

NO SCALE

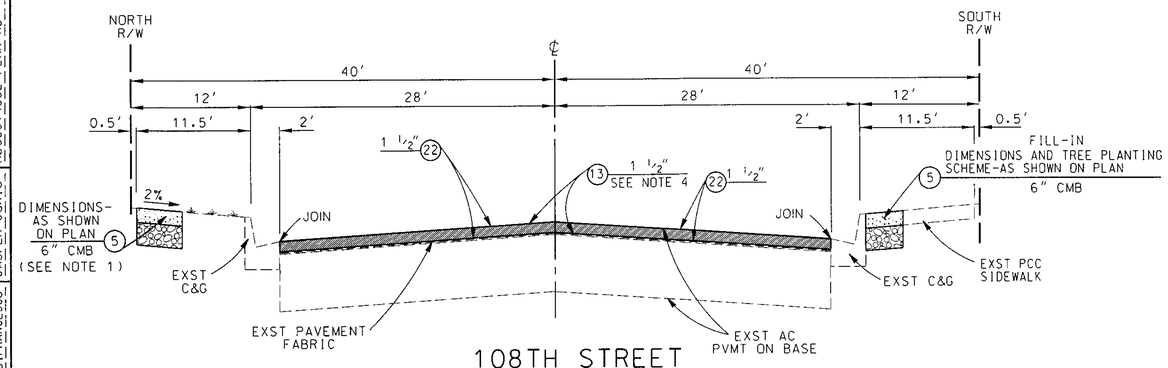

108TH STREET
TYPICAL SECTION

DENKER AVENUE TO NORMANDIE AVENUE

NO SCALE

(SEE SHEET 6)

NOTES:

1. MATCH EXISTING GRADE AT RIGHT OF WAY, HOUSEWALK, AND CONCRETE STEPS.
2. SEE SHEET 4 FOR C&G REPLACEMENT/TRENCH BACKFILL SLURRY SECTION.
3. SEE SHEET 5 FOR PAVEMENT JOIN DETAIL AT 108TH STREET AND VERMONT AVENUE.
4. REMOVE EXISTING PAVEMENT FABRIC. PAYMENT TO REMOVE EXISTING PAVEMENT FABRIC SHALL BE INCLUDED IN THE CONTRACT UNIT PRICE OF COLD MILL AC PAVEMENT
5. PAYMENT TO RECONSTRUCT LOCAL DEPRESSION SHALL BE INCLUDED IN THE CONTRACT UNIT PRICE OF RECONSTRUCT CATCH BASIN TOP.

PH082478

DATE	MK	DESCRIPTION

REVISIONS

REGISTERED PROFESSIONAL ENGINEER JASPER L. JUNIO NO. 66741 CIVIL STATE OF CALIFORNIA

PROJECT ENGINEER — DATE 4-9-13

COUNTY OF LOS ANGELES DEPARTMENT OF PUBLIC WORKS

108TH STREET ET AL.
108TH STREET
TYPICAL SECTIONS & DETAILS

PROJECT ID NO. RDC0014552

PCA X7201104CR | DWG | SHEET 3 OF 14

PROPOSED FOR CONSTRUCTION: — DATE
ADVERTISED: — DATE
AS BUILT: — DATE

DRAFTER J. DIFRANCESCO
DESIGNER J. DIFRANCESCO
CHECKER JASPER JUNIO
CADD PROJECT FILE NAME RDC0014552-PLAN-RD
REVIEWED BY — DATE 4/9/13

DATE: $DATE$ TIME: $TIME$ FILE: $FILEL$