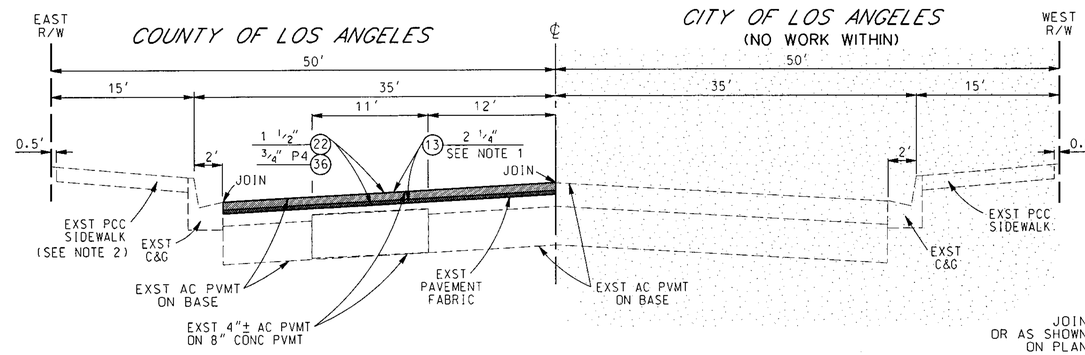

WESTERN AVENUE
TYPICAL SECTION
104TH STREET TO 108TH STREET
NO SCALE

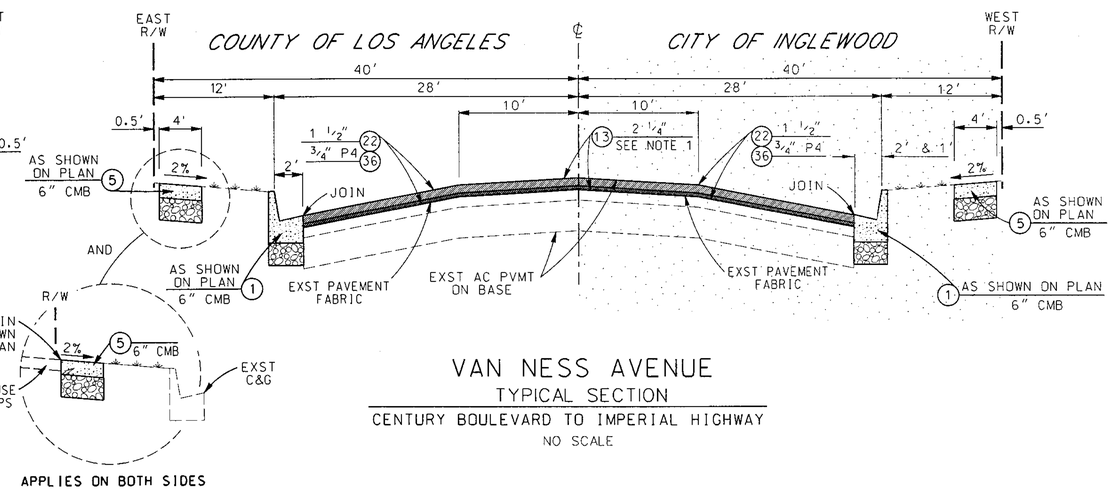

VAN NESS AVENUE
TYPICAL SECTION
CENTURY BOULEVARD TO IMPERIAL HIGHWAY
NO SCALE

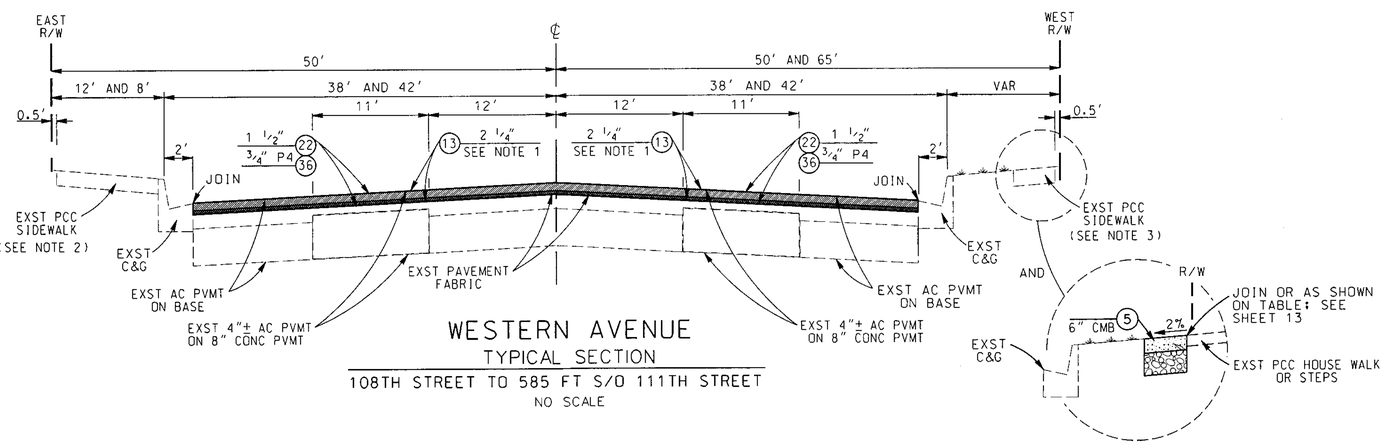

WESTERN AVENUE
TYPICAL SECTION
108TH STREET TO 585 FT S/O 111TH STREET
NO SCALE

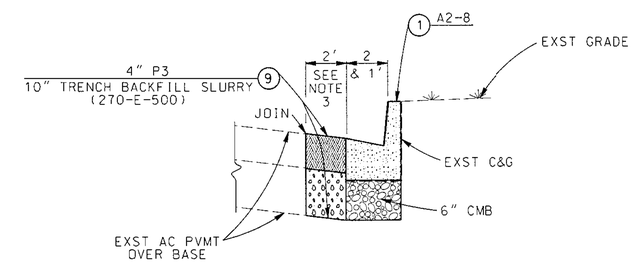

DETAIL A
C&G REPLACEMENT/
TRENCH BACKFILL SLURRY SECTION
NO SCALE

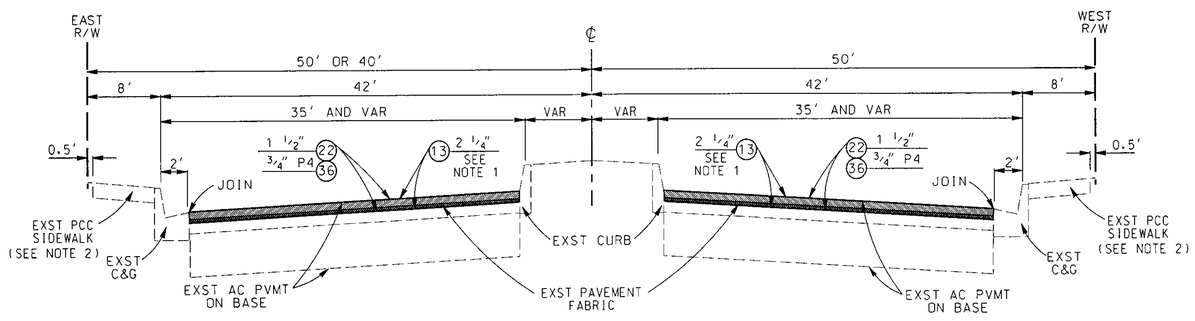

WESTERN AVENUE
TYPICAL SECTION
585 FT S/O 111TH STREET TO 1.802 FT S/O IMPERIAL HWY
NO SCALE

NOTES:

1. REMOVE EXISTING PAVEMENT FABRIC. PAYMENT TO REMOVE EXISTING PAVEMENT FABRIC SHALL BE INCLUDED IN THE CONTRACT UNIT PRICE OF COLD MILL AC PAVEMENT.
2. FOR SIDEWALK RECONSTRUCTION, SEE TABLE ON SHEET 13.
3. FOR CITY OF INGLEWOOD JURISDICTION, TRENCH WIDTH = 30 INCHES.

PH082479

DATE	MK	DESCRIPTION

REVISIONS

REGISTERED PROFESSIONAL ENGINEER JASPER L. JUNIO NO. 66741 CIVIL STATE OF CALIFORNIA

PROJECT ENGINEER 4-9-13 DATE

COUNTY OF LOS ANGELES DEPARTMENT OF PUBLIC WORKS

108TH STREET ET AL.

WESTERN AVENUE AND VAN NESS AVENUE
TYPICAL SECTIONS AND DETAILS

PROJECT ID NO. RDC0014552

PCA X7201104CR | DWG | SHEET 4 OF 14

PROPOSED FOR CONSTRUCTION: DATE
ADVERTISED: DATE
AS BUILT: DATE

DRAFTER J. DIFRANCESCO
DESIGNER J. DIFRANCESCO
CHECKER JASPER JUNIO
CADD PROJECT FILE NAME RDC0014552-PLAN-RD
REVIEWED BY
DATE 4-9-13

DATE: $DATE$ TIME: $TIME$ FILE: $FILEL$