BENCH MARK
GTRL#109 : PWLB 1626. PAGES 607
ELEVATION : 684.810 (PASADENA QUAD 95)
FD "C"NAIL & LS TAG #3571 ON C FOOTHILL
BC. 132.47M W/C INT MICHILLINDA AVE.

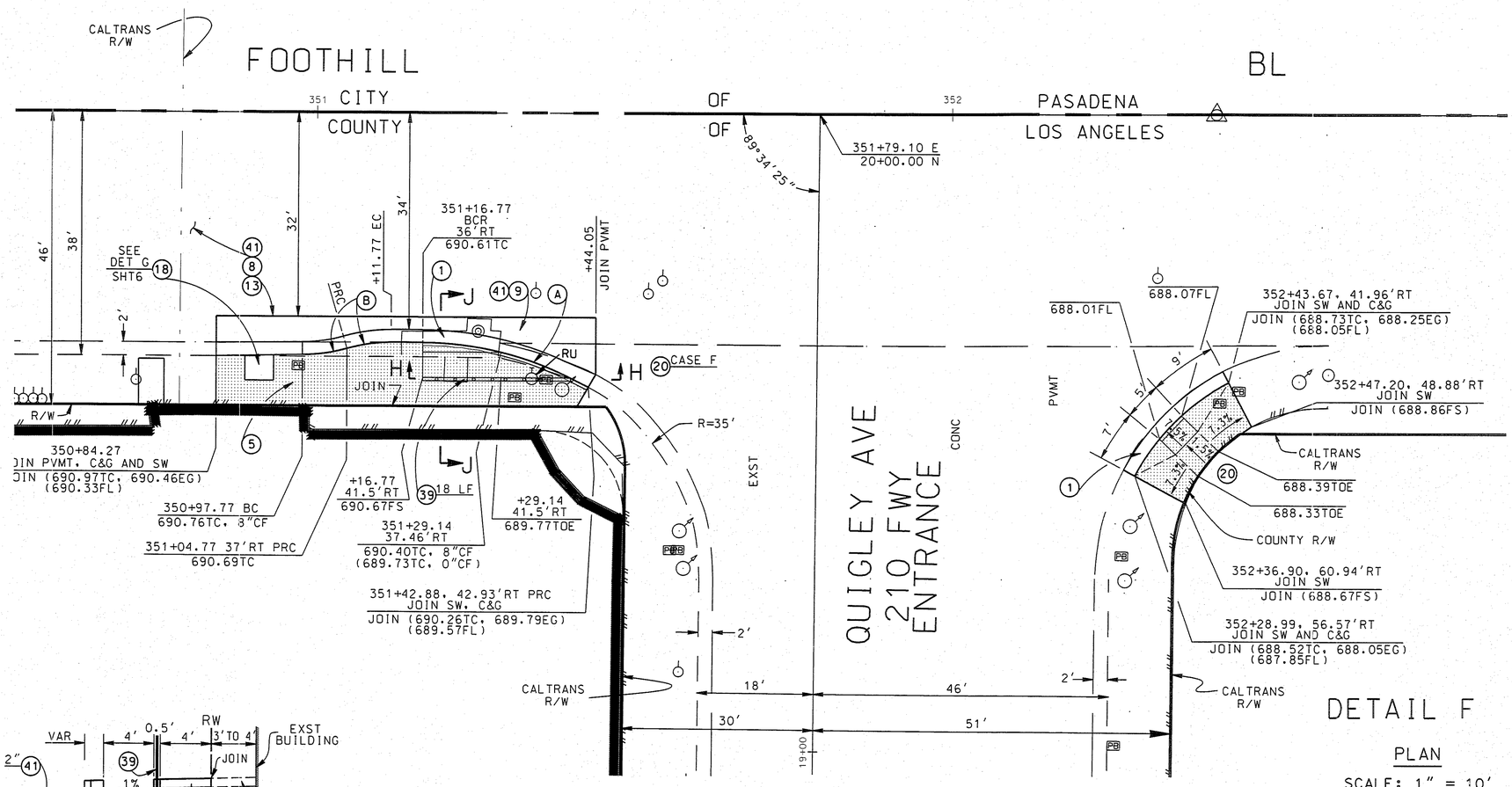

DETAIL F

PLAN

SCALE: 1" = 10'

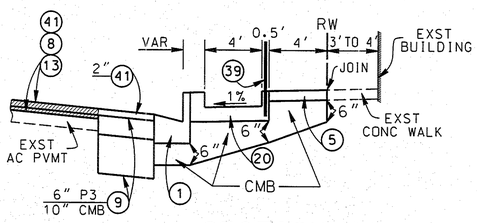

SECTION J-J
NO SCALE

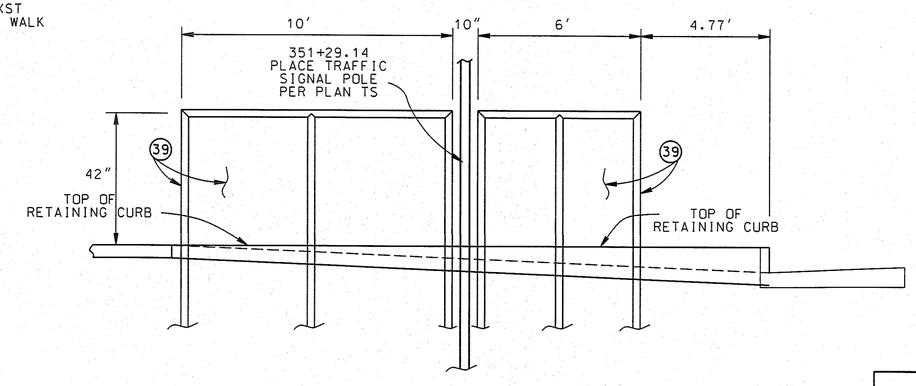

FRONT VIEW
SECTION H-H
NO SCALE

CURVE DATA						
CURVE	RADIUS FT	CENTRAL ANGLE DEG	MIN	SEC	LENGTH FT	TANGENT FT
A	52	30	04	49	27.30	13.97
B	25	16	15	37	7.09	3.57

PH082655

PLAN A

DATE	MK	DESCRIPTION
2-18-15	S.K.	REVISED RESURFACING STRUCTURAL SECTION.
10-10-13	S.K.	REV CURB RETURN AT QUIGLEY AVE.

REVISIONS

REGISTERED PROFESSIONAL ENGINEER SUNG KIM No. 46694 CIVIL STATE OF CALIFORNIA
PROJECT ENGINEER 6/6/13 DATE

COUNTY OF LOS ANGELES DEPARTMENT OF PUBLIC WORKS

FOOTHILL BOULEVARD
- ROSEMEAD BL TO MICHILLINDA AVE. ET AL

PLAN AND DETAIL
PROJECT ID NO. RDC0013674

JOB X7500165 | DWG PH082655 | SHEET 5 OF 6

PPS-DH 10/00

DRAFTER T. VIDANAGAMA | DESIGNER T. VIDANAGAMA | CHECKER S. KIM | CADD PROJECT FILE NAME RDC0013674_civilplan.dgn | REVIEWED BY | DATE