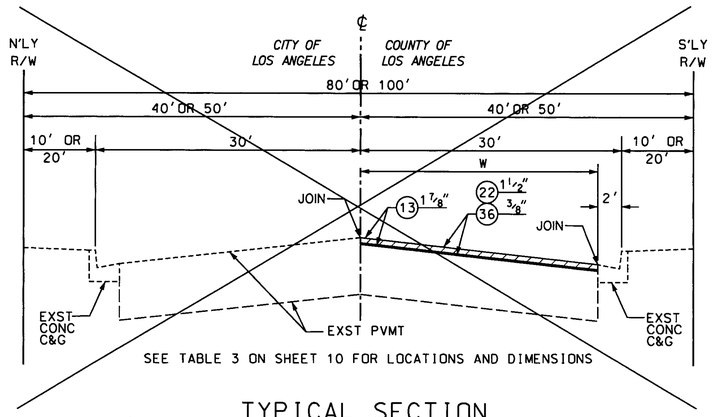

SEE TABLE 3 ON SHEET 10 FOR LOCATIONS AND DIMENSIONS

TYPICAL SECTION

1

NOT TO SCALE

CENTURY BL - 160' W/O DENKER AV TO HALLDALE AV

CONSTRUCTION SEQUENCE

2

1. COLD MILL EXISTING PAVEMENT
2. PLACE ARAM ON COLD MILLED SURFACE
3. PLACE ARHM ON ARAM

OR

1. COLD MILL EXISTING PAVEMENT
2. PLACE AC PVMT ON COLD MILLED SURFACE
3. PLACE ARAM ON AC PVMT
4. PLACE ARHM ON ARAM

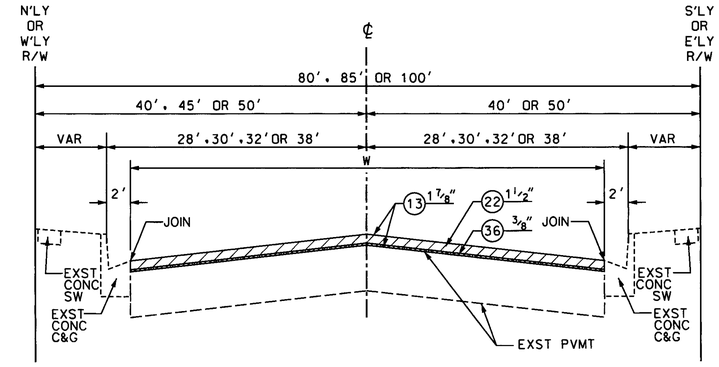

SEE TABLE 3 ON SHEET 10 FOR LOCATIONS AND DIMENSIONS

TYPICAL SECTION

2

NOT TO SCALE

120TH ST - AVIATION BL TO 230' W/O ISIS AV

120TH ST - 150' W/O LA CIENEGA BL TO LA CIENEGA BL

120TH ST - 980' W/O VERMONT AV TO 290' W/O VERMONT AV

CENTURY BL - 980' W/O VERMONT AV TO VERMONT AV

CENTURY BL - HALLDALE AV TO 317' E/O NORMANDIE AV

COMPTON AV - IMPERIAL HY TO 238' S/O 117TH ST

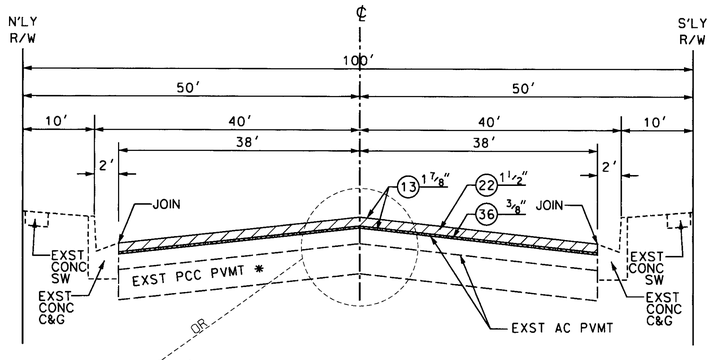

TYPICAL SECTION

2

NOT TO SCALE

FIRESTONE BL - CENTRAL AV TO GRAHAM AV *

FIRESTONE BL - JUNIPER ST TO ALAMEDA ST

(SHEETS 4, 5, & 6)

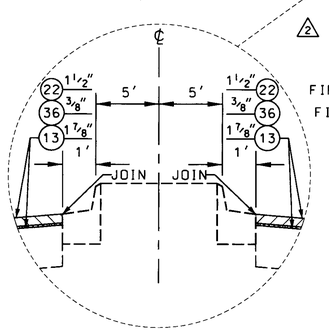

FIRESTONE BL

290' E/O HOOPER AV TO COMPTON AV

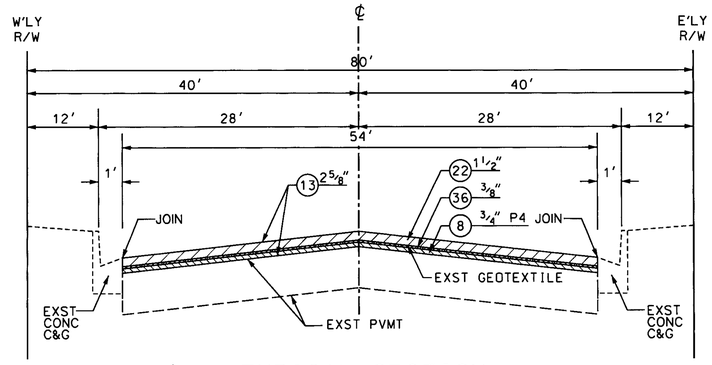

TYPICAL SECTION

2

NOT TO SCALE

HOOPER AV - SLAUSON AV TO 135' S/O 58TH DR

(SHEET 6)

PH083784

DATE	MK	DESCRIPTION
11-10-15	2	REVISE SECTIONS
11-10-15	1	DELETE PAVEMENT. SEGMENT PAVED BY CITY OF LA.

REVISIONS

REGISTERED PROFESSIONAL ENGINEER MARCEL ORELLANA No. 62045 CIVIL STATE OF CALIFORNIA

PROJECT ENGINEER 4-9-14 DATE

COUNTY OF LOS ANGELES DEPARTMENT OF PUBLIC WORKS

FIRESTONE BL - CENTRAL AV/GRAHAM AV, ET AL

TYPICAL SECTIONS

PROJECT ID NO. RDC0014915

PCA | DWG | SHEET 3 OF 10

PS-DH 06/03

DRAFTER A TORRES | DESIGNER M ORELLANA | CHECKER M ORELLANA | CADD PROJECT FILE NAME RDC0014915-PLAN-RD.DGN | REVIEWED BY | DATE

PROPOSED FOR CONSTRUCTION: DATE | ADVERTISED: DATE | AS BUILT: DATE

DATE $DATE$ TIME $TIME$ FILE $FILEL$