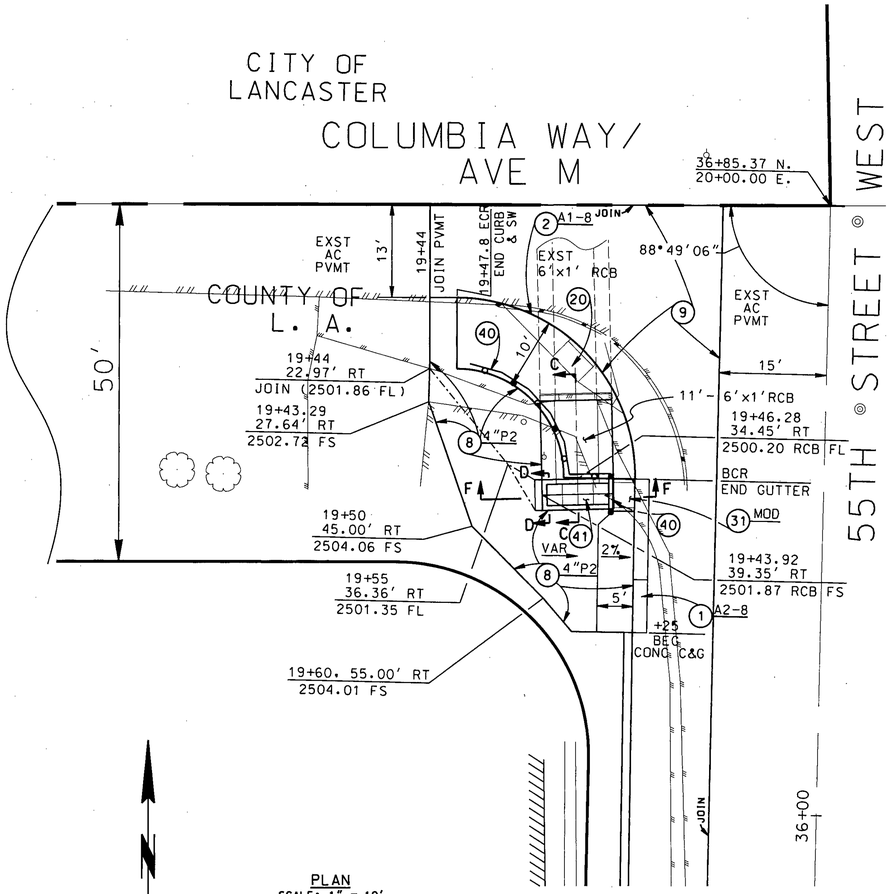

PLAN
SCALE: 1" = 10'

BENCH MARK
PT#2 EST PWFB 3421. PAGE 837
ELEVATION: 2517.96 (BASELINE 2004)
CO. ENG. MON IN WELL DN 9" @ INT
55TH ST. W. & AVE M-2

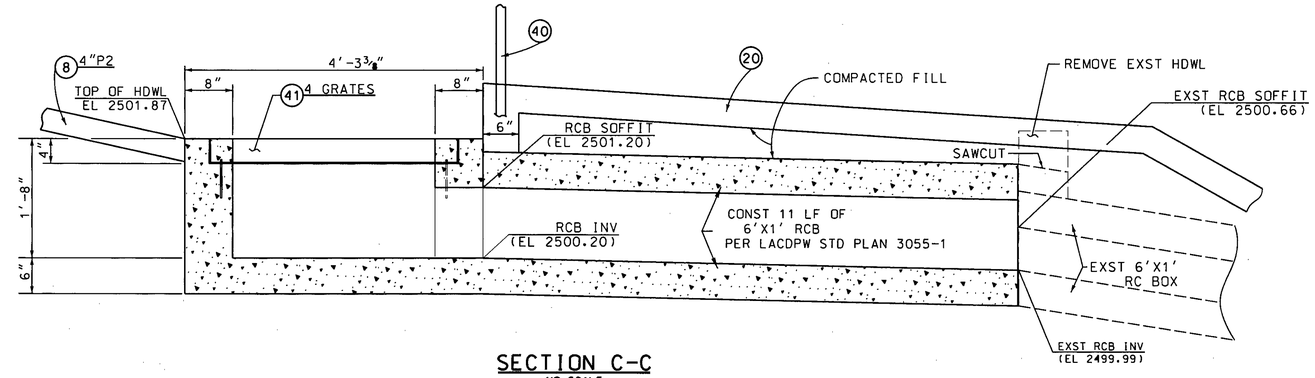

SECTION C-C
NO SCALE

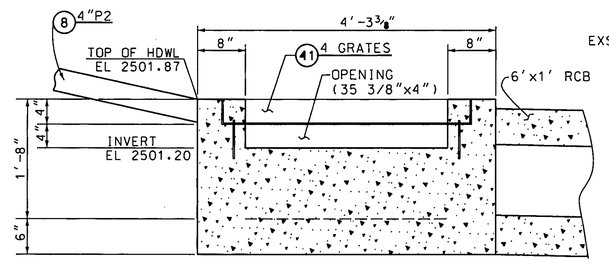

SECTION D-D
NO SCALE

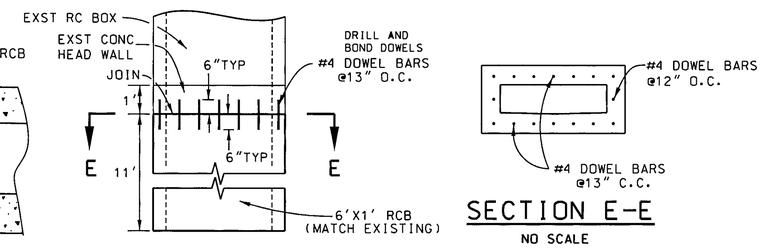

SECTION E-E
NO SCALE

RC BOX CONNECTION DETAIL
NO SCALE

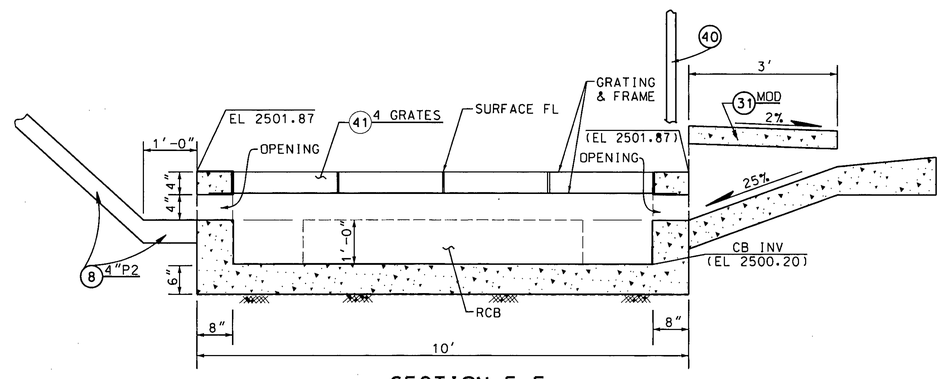

SECTION F-F
NO SCALE

PH084462

DATE	MK	DESCRIPTION

REVISIONS

REGISTERED PROFESSIONAL ENGINEER SUNG H KIM No. 46694 CIVIL STATE OF CALIFORNIA

PROJECT ENGINEER 12/15/15 DATE

COUNTY OF LOS ANGELES DEPARTMENT OF PUBLIC WORKS

QUARTZ HILL ELEMENTARY SCHOOL TRAFFIC IMPROVEMENTS

55TH STREET WEST - AVE M TO AVE M-6

PLAN AND DETAIL
PROJECT ID NO. RDC0015863

PCAX250000681 | DWG PH084462 | SHEET 9 OF 9

DRAFTER	DESIGNER	CHECKER	CADD PROJECT FILE NAME	REVIEWED	DATE
S. KIM	S. KIM		RDC0015863_civil		12/15/15

DATE: $DATE$ TIME: $TIME$ FILE: $FILEL$