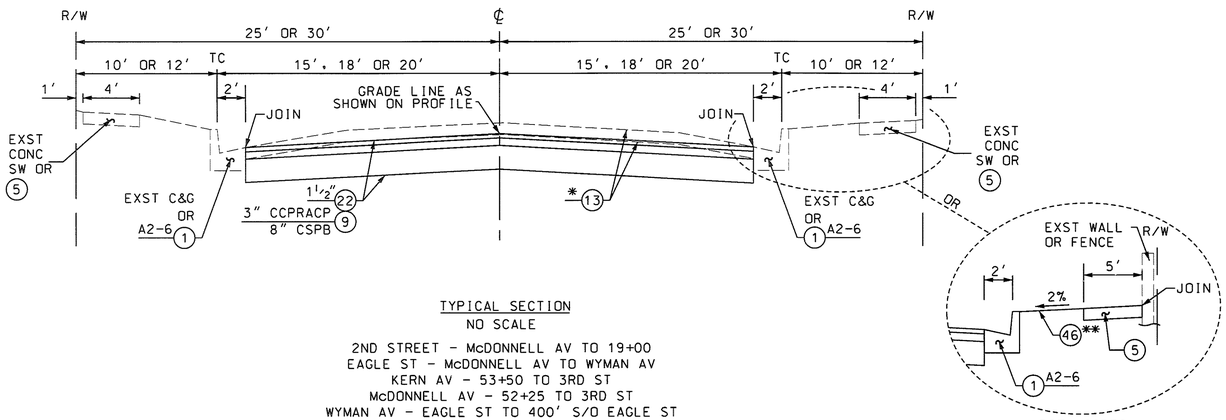

TYPICAL SECTION
NO SCALE

2ND STREET - McDONNELL AV TO 19+00
EAGLE ST - McDONNELL AV TO WYMAN AV
KERN AV - 53+50 TO 3RD ST
McDONNELL AV - 52+25 TO 3RD ST
WYMAN AV - EAGLE ST TO 400' S/O EAGLE ST

BOTH SIDES
KERN AV- ENTIRE SEGMENT

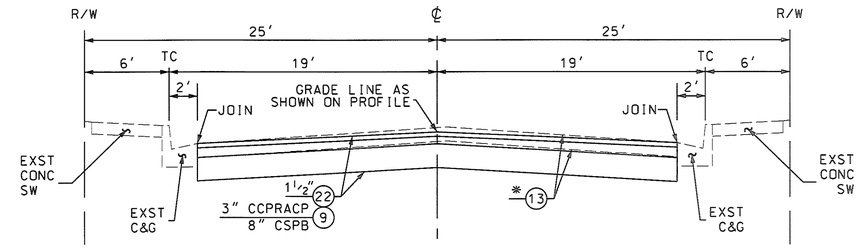

TYPICAL SECTION
NO SCALE

DUNCAN AV - 53+00 TO WHITTIER BL
McBRIDE AV - 6TH ST TO WHITTIER BL
McDONNELL AV - 68+25 TO 71+25, 78+50 TO 79+50, 84+75 TO WHITTIER BL

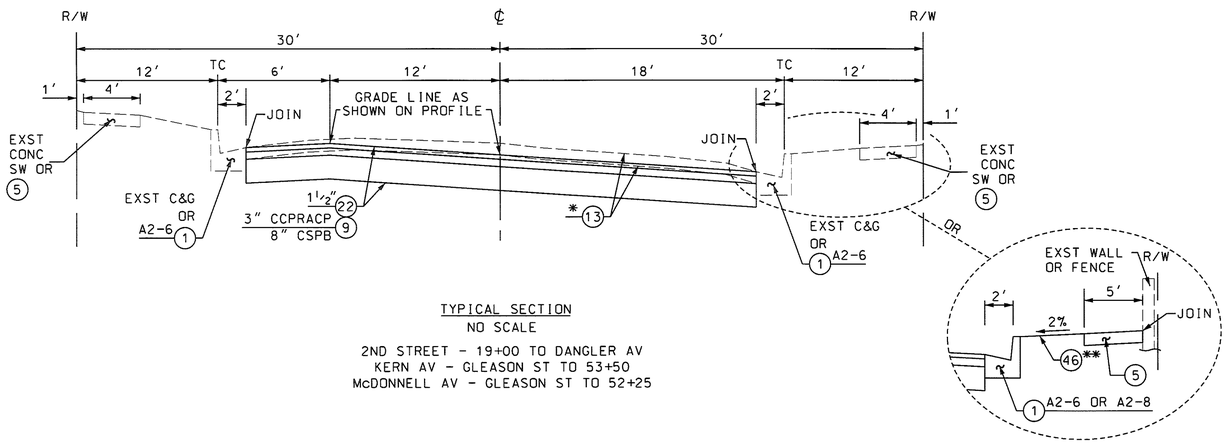

TYPICAL SECTION
NO SCALE

2ND STREET - 19+00 TO DANGLER AV
KERN AV - GLEASON ST TO 53+50
McDONNELL AV - GLEASON ST TO 52+25

BOTH SIDES
KERN AV- ENTIRE SEGMENT

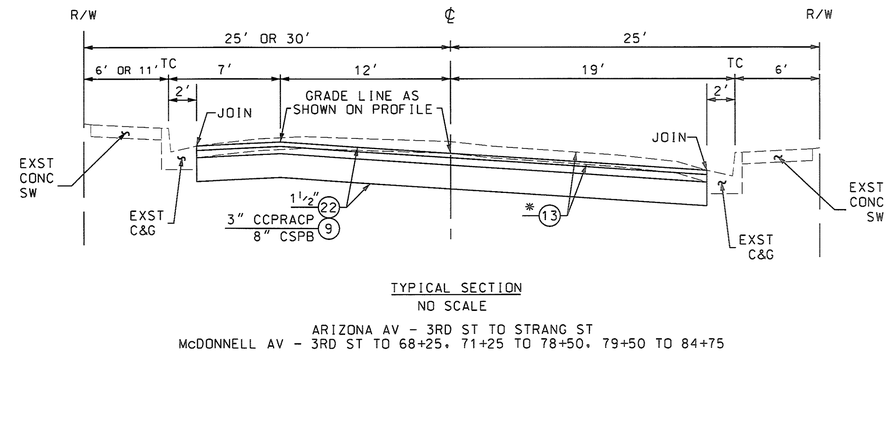

TYPICAL SECTION
NO SCALE

ARIZONA AV - 3RD ST TO STRANG ST
McDONNELL AV - 3RD ST TO 68+25, 71+25 TO 78+50, 79+50 TO 84+75

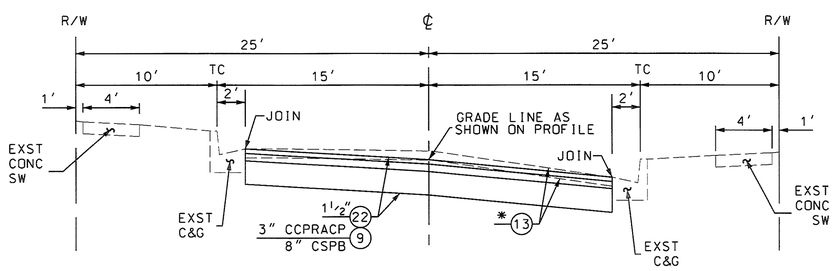

TYPICAL SECTION
NO SCALE

4TH ST - McDONNELL AV TO 300' E/ O McDONNELL AV

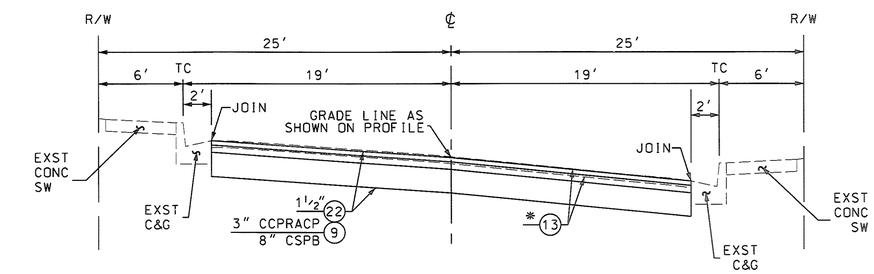

TYPICAL SECTION
NO SCALE

4TH ST - ARIZONA AV TO MEDNIK AV
DUNCAN AV - 6TH ST TO 53+00

PH084479

* SEE TABLE 1 ON SHEET 4
** TYPE OF SOD INSTALLED SHALL BE MARATHON OR ST. AUGUSTINE TO MATCH EXISTING.

DATE	MK	DESCRIPTION

REVISIONS

REGISTERED PROFESSIONAL ENGINEER DANIEL ORELLANA No. C62045 CIVIL STATE OF CALIFORNIA

PROJECT ENGINEER 1-15-15 DATE

COUNTY OF LOS ANGELES DEPARTMENT OF PUBLIC WORKS

McDONNELL AV, ET AL.

TYPICAL SECTIONS

PROJECT ID NO. RDC0015818

PCA | DWG | SHEET 3 OF 24

PS-DR 12/10

DRAFTER M. MILOSEVIC | DESIGNER J. NOORPARVAR | CHECKER M. ORELLANA | CADD PROJECT FILE NAME RDC0015818-PLAN-RD.DGN | REVIEWED BY | DATE

DATE: 4/22/2015 TIME: 10:11:45 AM FILE: RDC0015818-PLAN-RD.dgn