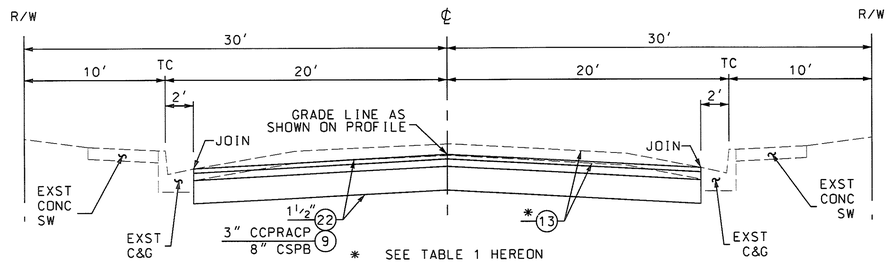

* SEE TABLE 1 HEREON

TYPICAL SECTION

NO SCALE

ARIZONA AV - GLEASON ST TO 3RD ST
DANGLER AV - STA 33+25 TO 3RD ST

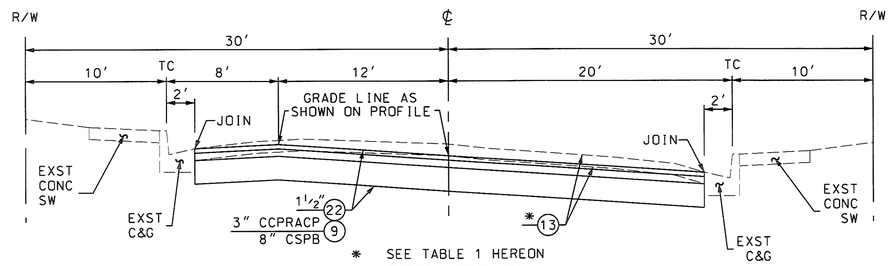

* SEE TABLE 1 HEREON

TYPICAL SECTION

NO SCALE

DANGLER AV - GLEASON ST TO 33+25

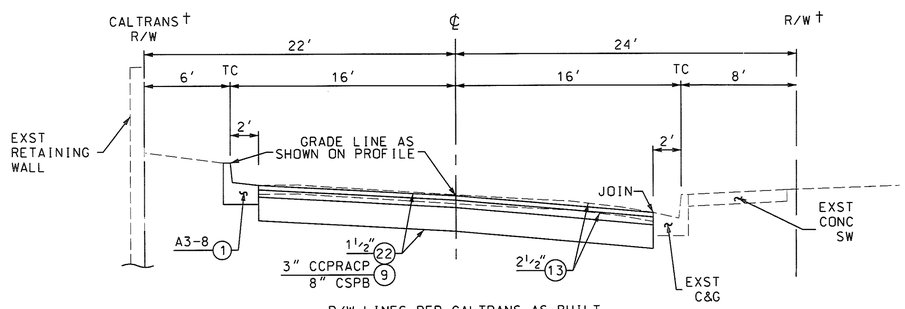

† R/W LINES PER CALTRANS AS-BUILT PLANS FOR CONTRACT NO. 07-033124

TYPICAL SECTION

NO SCALE

GLEASON ST - DANGLER AV TO KERN AV

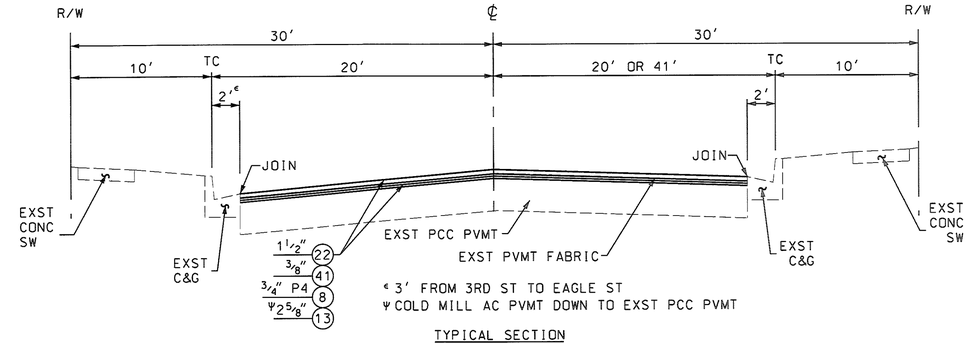

℄ 3' FROM 3RD ST TO EAGLE ST
Ψ COLD MILL AC PVMT DOWN TO EXST PCC PVMT

TYPICAL SECTION

NO SCALE

FORD BL - 3RD ST TO WHITTIER BL

SEGMENT	LIMITS	(13) β AC THICKNESS	(13) AREA (SF)	EXST BASE (PER MATERIALS TEST REPORT)
2ND ST	MCDONNELL AV TO DANGLER AV	3½"	21,280	6" CAB
4TH ST	ARIZONA AV TO MEDNIK AVE	2½"	6,188	3" CMB
	MCDONNELL AV TO 300' E/O MCDONNELL AV	2½"	7,800	6" CMB
ARIZONA AV	GLEASON ST TO 3RD ST	1¾"	34,560	NATIVE
	3RD ST TO 600' S/O 3RD ST	3"	20,400	3" CMB
	400' N/O STRANG ST TO STRANG ST	2½"	13,600	3" CMB
DANGLER AV	GLEASON ST TO 500' S/O GLEASON ST	4"	18,090	NATIVE
	405' N/O 3RD ST TO 3RD ST	3"	14,490	NATIVE
DUNCAN AV	6TH ST TO WHITTIER BL	2"	57,630	6" CMB
EAGLE ST	MCDONNELL AV TO WYMAN AV	2¼"	7,800	6" CMB
GLEASON ST	DANGLER AV TO KERN AV	2½"	16,380	8" CAB
KERN AV	GLEASON ST TO 495' S/O GLEASON ST	4"	15,840	2" MAC ON NATIVE
	495' N/O 3RD ST TO 3RD ST	3½"	15,840	4" MAC ON NATIVE
MCBRIDE AV	6TH ST TO HUBBARD ST	2½"	29,240	6" CAB
	HUBBARD ST TO WHITTIER BL	2½"	29,580	6" CMB
MCDONNELL AV	GLEASON ST TO 2ND ST	4"	10,560	NATIVE
	2ND ST TO 3RD ST	4"	12,600	3" CAB
	3RD ST TO STRANG ST	4"	32,752.5	6" CMB
	STRANG ST TO 6TH ST	2½"	44,072.8	6" CMB
	6TH ST TO 840' S/O 6TH ST	4¼"	28,560	6" CMB
	840' N/O WHITTIER BL TO WHITTIER BL	3¾"	28,560	6" CMB
WYMAN AV	EAGLE ST TO 400' S/O EAGLE ST	1¾"	10,400	3" CMB

TABLE 1

β QUANTITIES TAKEN FROM CORES COMPLETED APPROXIMATELY EVERY 500'

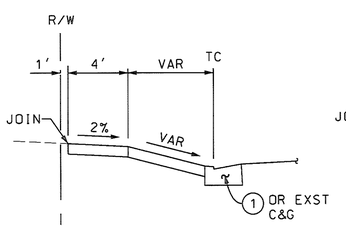

TYPICAL DRIVEWAY

NO SCALE

2ND ST, FORD BL

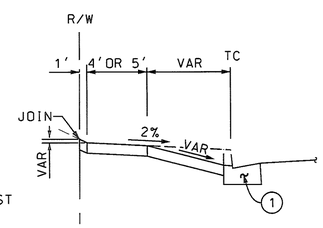

TYPICAL DRIVEWAY

NO SCALE

KERN AV, EAGLE ST, WYMAN AV
McDONNELL AV (STA 70+54)

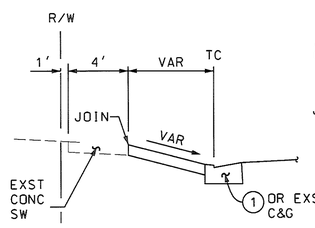

TYPICAL DRIVEWAY

NO SCALE

ARIZONA AV, McDONNELL AV

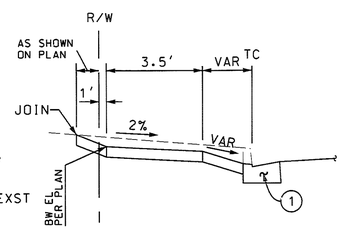

TYPICAL DRIVEWAY

NO SCALE

McBRIDE AV
McDONNELL AV (STA 70+54)
McDONNELL AV (STA 76+11)

DATE	MK	DESCRIPTION

REVISIONS

REGISTERED PROFESSIONAL ENGINEER MANEL ORELLANA No. C62045 CIVIL STATE OF CALIFORNIA

PROJECT ENGINEER 1-15-15 DATE

COUNTY OF LOS ANGELES DEPARTMENT OF PUBLIC WORKS

McDONNELL AV, ET AL.

TYPICAL SECTIONS

PROJECT ID NO. RDC0015818

PCA | DWG | SHEET 4 OF 24

PS-DH 12/10

PH084480

DATE | REVIEWED BY | CADD PROJECT FILE NAME RDC0015818-PLAN-RD.DGN | CHECKED M. ORELLANA | DESIGNER J. NOORPARVAR | DRAFTER M. MILOSEVIC

DATE. 4/22/2015 TIME. 10:11:45 AM FILE. RDC0015818-PLAN-RD.dgn