SCALE: HOR. 1"= 40'
VERT. 1"= 16'

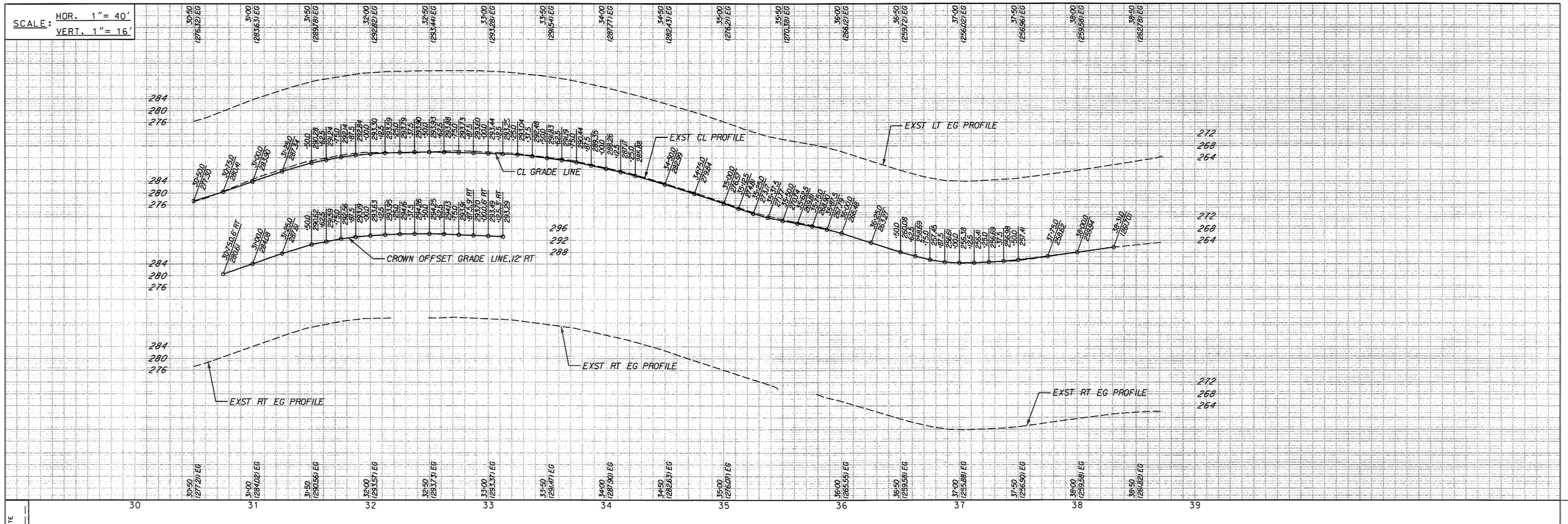

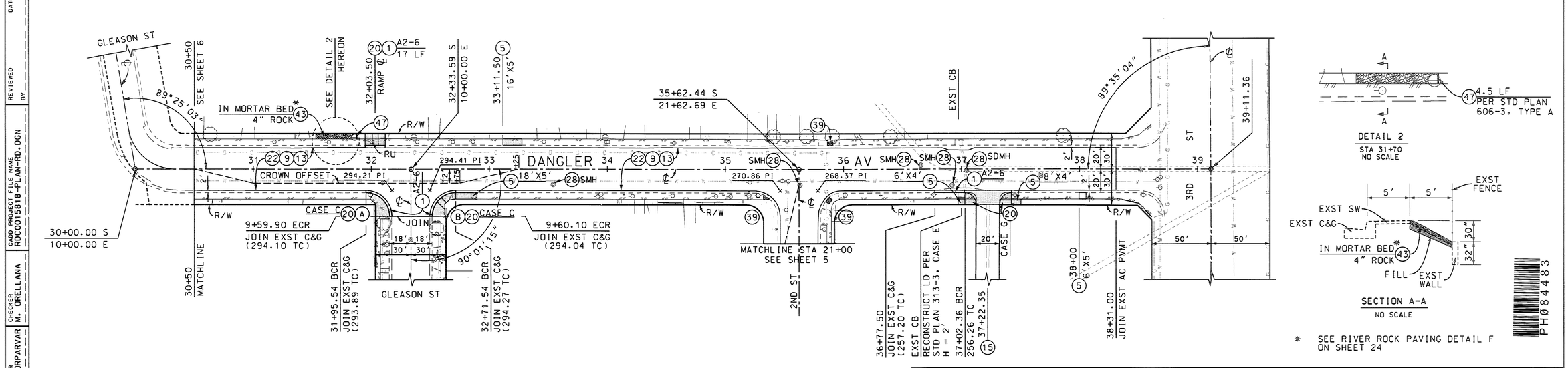

DETAIL 2
STA 31+70
NO SCALE

SECTION A-A
NO SCALE

* SEE RIVER ROCK PAVING DETAIL F ON SHEET 24

CURVE DATA						
CURVE	RADIUS (FT)	CENTRAL ANGLE DEG	MIN	SEC	LENGTH (FT)	TANGENT (FT)
A	20.00	90	01	15	31.42	20.00
B	20.00	89	58	45	31.41	19.99

BENCHMARK 119
PWFB 1223, PAGE 6179
℄ INT GLEASON AV & DANGLER AV
RD MON
ELEV= 293.775 NAVD'88 (RIVERA 2005)

PLAN
SCALE: 1" = 40'
25 0 50 100

DATE	MK	DESCRIPTION

REVISIONS

REGISTERED PROFESSIONAL ENGINEER MANUEL ORELLANA No. 62045 CIVIL STATE OF CALIFORNIA

PROJECT ENGINEER 1-15-15 DATE

COUNTY OF LOS ANGELES DEPARTMENT OF PUBLIC WORKS

McDONNELL AV, ET AL.

PLAN AND PROFILE
DANGLER AVENUE
PROJECT ID NO. RDC0015818

PCA | DWG | SHEET 7 OF 24

PP3-DH 12/10

DRAFTER M. MILOSEVIC | DESIGNER J. NOORPARVAR | CHECKER M. ORELLANA | CADD PROJECT FILE NAME RDC0015818-PLAN-RD.DGN | REVIEWED BY | DATE

PH084483

DATE: 4/22/2015 TIME: 10:11:56 AM FILE: RDC0015818-PLAN-RD.dgn