SEE SHEET 4 AND SHEET 5 FOR TYPICAL SECTIONS

CURVE	RADIUS (FT)	CENTRAL ANGLE DEG	MIN	SEC	LENGTH (FT)	TANGENT (FT)
A	21 00	44	23	06	16 27	8 57
B	36 00	107	03	01	67 26	48 70
C	46 00	44	05	12	35 40	18 63
D	52 00	28	36	05	25 96	13 26
E	20 00	36	52	12	12 87	6 67
F	49 00	45	01	05	38 50	20 31
G	2 00	117	30	57	4 10	3 30
H	2 00	123	14	54	4 30	3 70
J	2 00	130	24	50	4 55	4 33

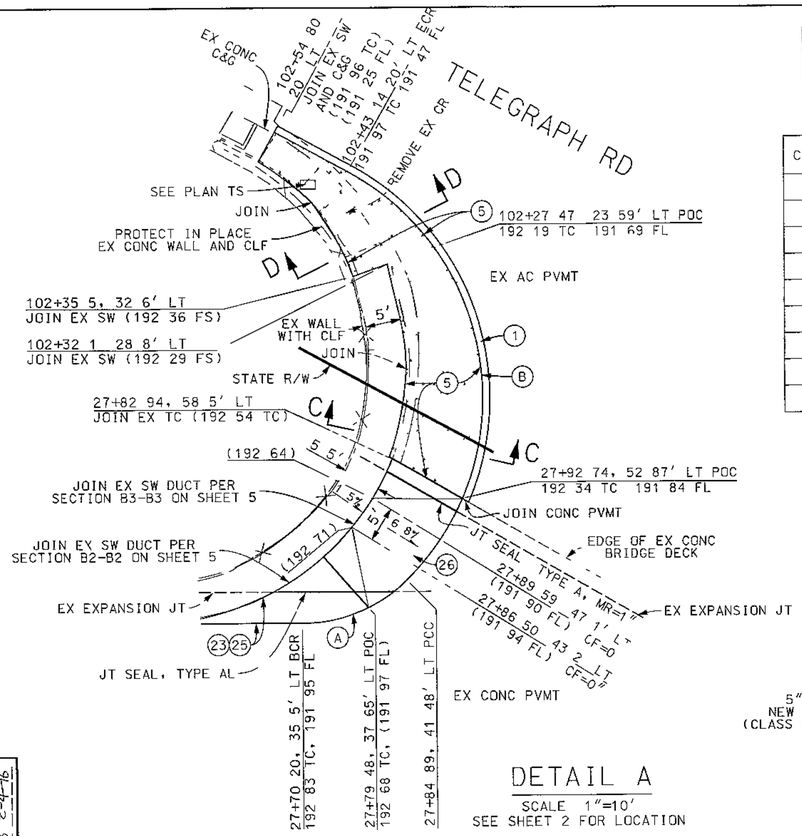

DETAIL A

SCALE 1"=10'
SEE SHEET 2 FOR LOCATION

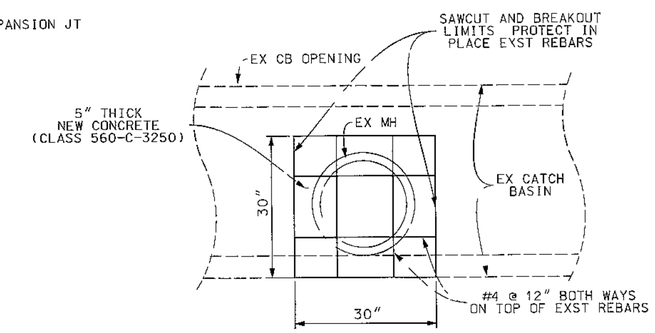

MH REMOVAL DETAIL

NO SCALE

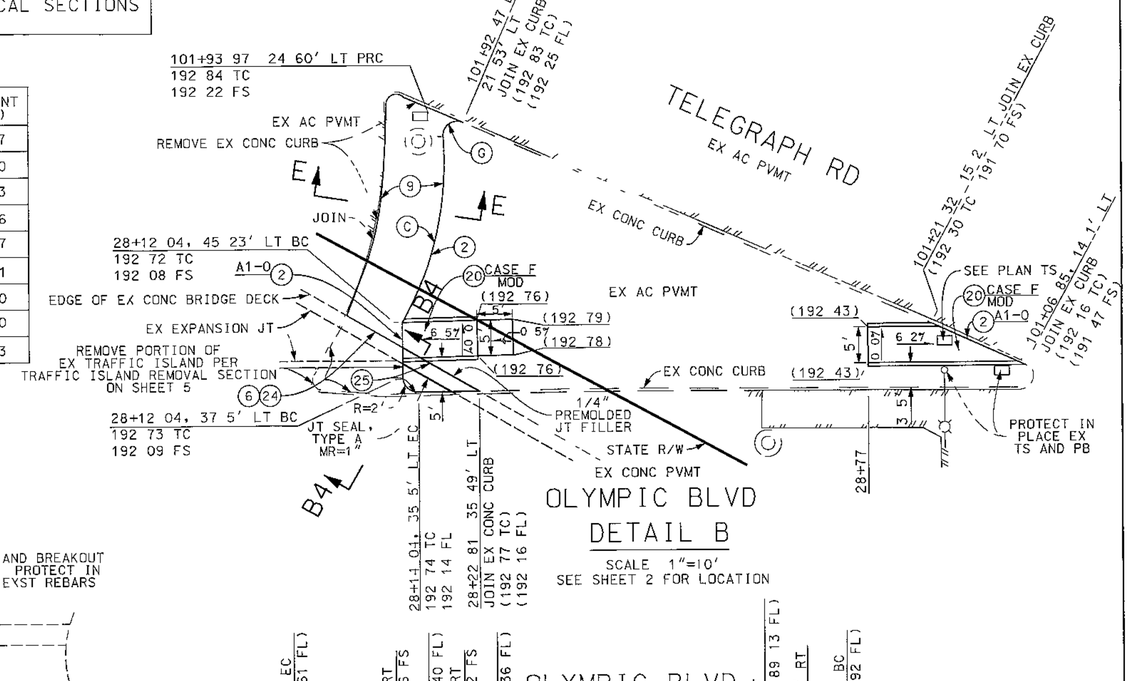

OLYMPIC BLVD

DETAIL B

SCALE 1"=10'
SEE SHEET 2 FOR LOCATION

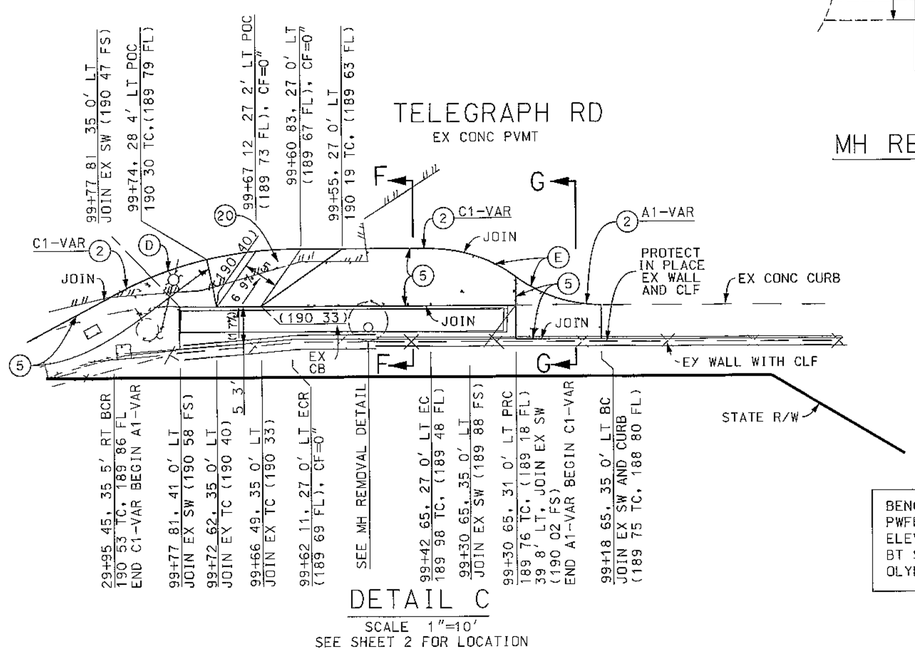

DETAIL C

SCALE 1"=10'
SEE SHEET 2 FOR LOCATION

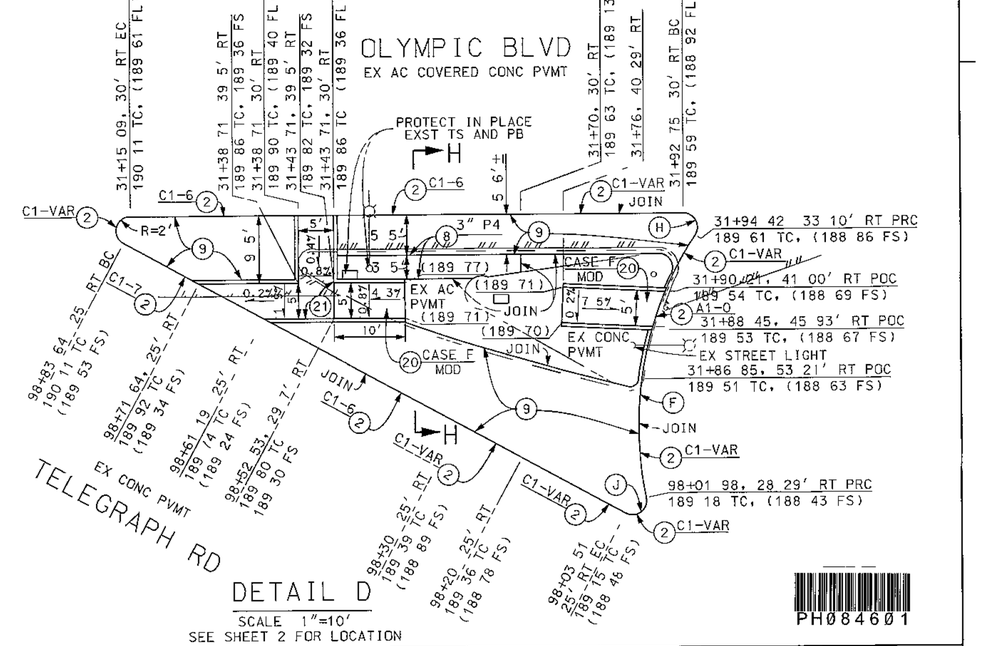

DETAIL D

SCALE 1"=10'
SEE SHEET 2 FOR LOCATION

BENCHMARK PT #214
PWFB 1123, PG 3266
ELEV 190 826 (RIVERA 2005)
BT SPK & DPW W FL CL INT
OLYMPIC BLVD & TELEGRAPH RD

DATE	MK	DESCRIPTION

REVISIONS

REGISTERED PROFESSIONAL ENGINEER SHERRIE JONG No 56647 Exp 6-30-17 CIVIL STATE OF CALIFORNIA

PROJECT ENGINEER 2-4-16 DATE

COUNTY OF LOS ANGELES DEPARTMENT OF PUBLIC WORKS

OLYMPIC BOULEVARD AT TELEGRAPH ROAD

CONSTRUCTION DETAILS
PROJECT ID NO RDC0015896

PCA X210001004 | DWG | SHEET 3 OF 5

PH084601

DRAFTER S JONG | DESIGNER S JONG | CHECKER D RADLE | RADD PROJECT FILE NAME RDC0015896-PLAN_RD_DT DGN | REVIEWED B\ Steve Bailey | DATE 2-4-16

PLAN RD