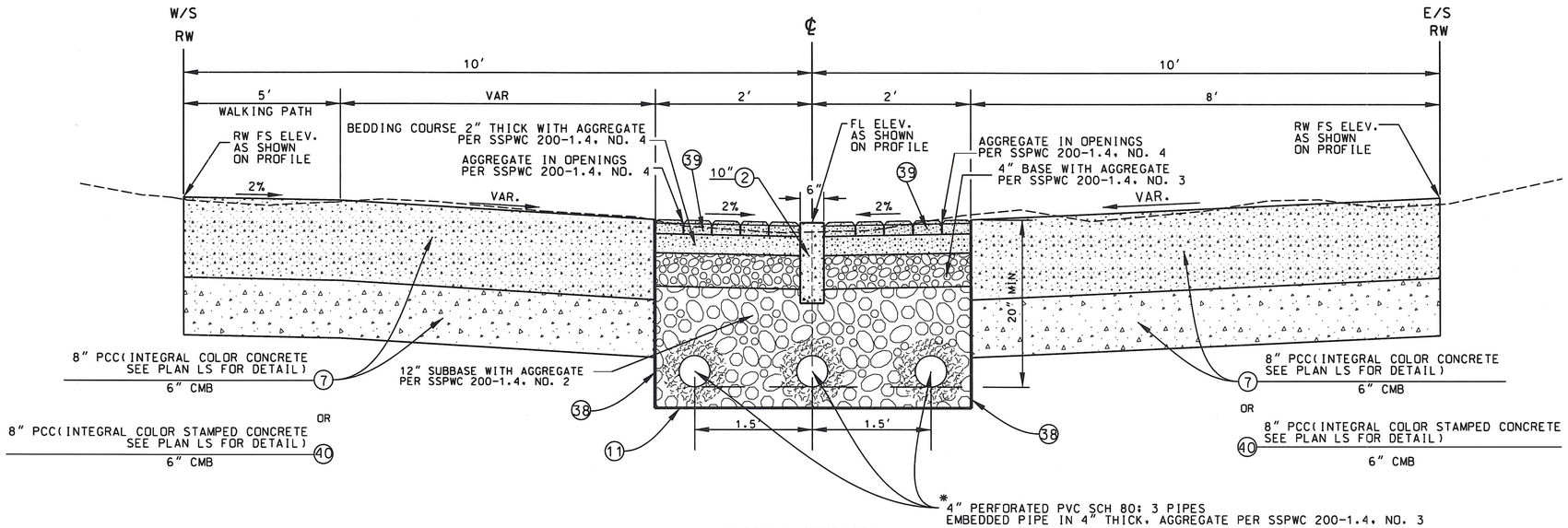

TYPICAL SECTION

NOT TO SCALE

ALLEY FROM 120TH ST TO 119TH ST - STA. 0+29.91 TO STA. 4+50.69
ALLEY FROM 119TH ST TO 118TH ST - STA. 5+10.49 TO STA. 9+55.81

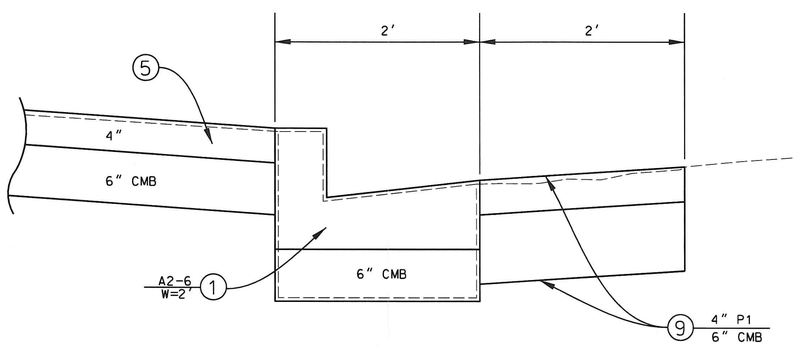

TYPICAL C&G AND SIDEWALK REPLACEMENT

NOT TO SCALE

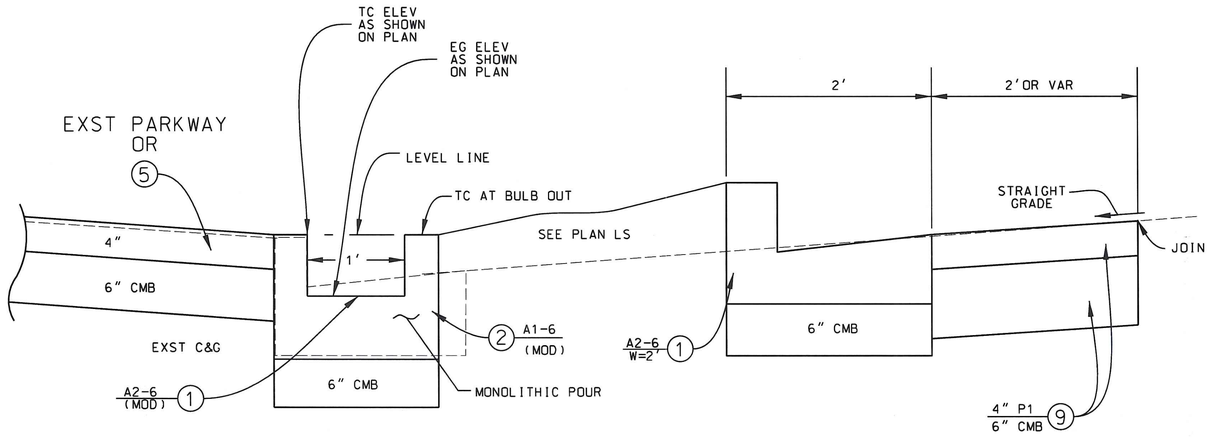

TYPICAL BULB OUT SECTION

NOT TO SCALE

PH084948

PLAN RD

NOTE: * NOT TO BE MAINTAINED BY THE LOS ANGELES COUNTY FLOOD CONTROL DISTRICT (LACFCD)

DATE	MK	DESCRIPTION

REVISIONS

REGISTERED PROFESSIONAL ENGINEER F. CRUZ C59441 CIVIL STATE OF CALIFORNIA

PROJECT ENGINEER 11/17/15 DATE

COUNTY OF LOS ANGELES DEPARTMENT OF PUBLIC WORKS

WILLOWBROOK GREEN ALLEY

E 120TH STREET TO E 118TH STREET

PROJECT ID NO. RDC0016071

PCA X920001043 | DWG | SHEET 3 OF 8

DRAFTER	DESIGNER	CHECKER	CADD PROJECT FILE NAME	REVIEWED BY	DATE
W.L.	W.L.	F. CRUZ	RDC0016071.DGN		

DATE: $DATE$ TIME: $TIME$ FILE: $FILE$