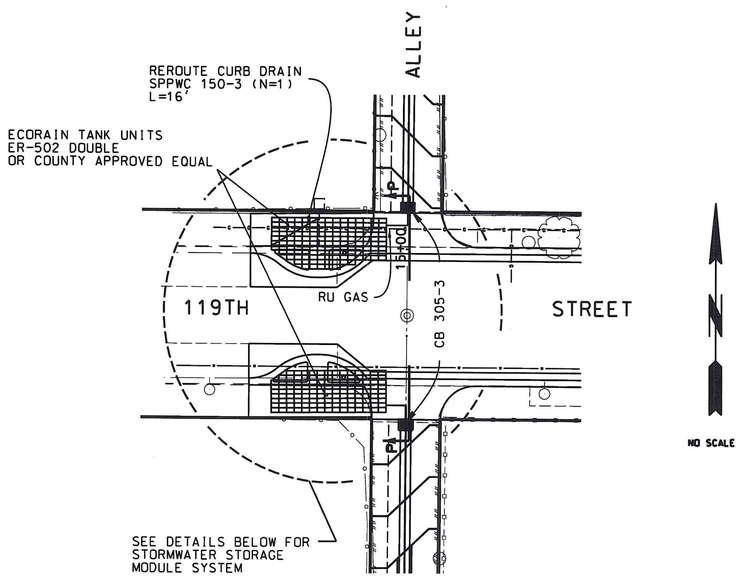

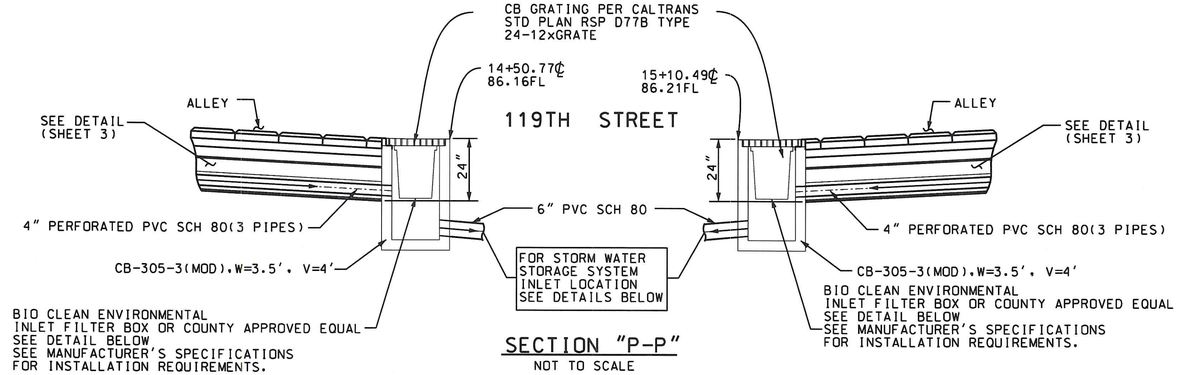

SECTION "P-P"

NOT TO SCALE

NOT TO BE MAINTAINED BY LACFCD

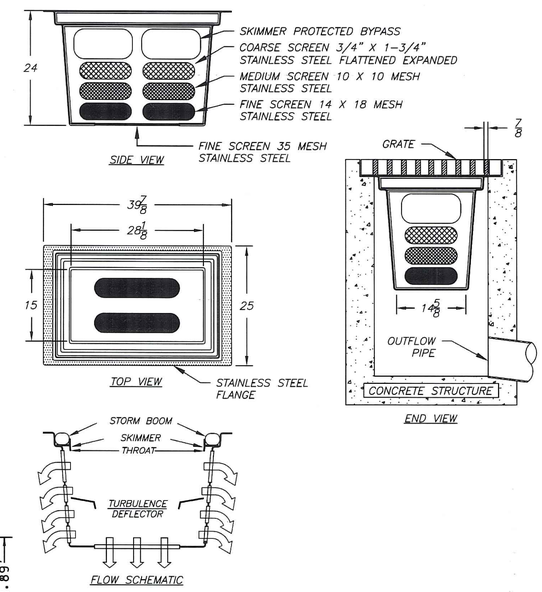

INLET FILTER BOX DETAIL

NOT TO SCALE

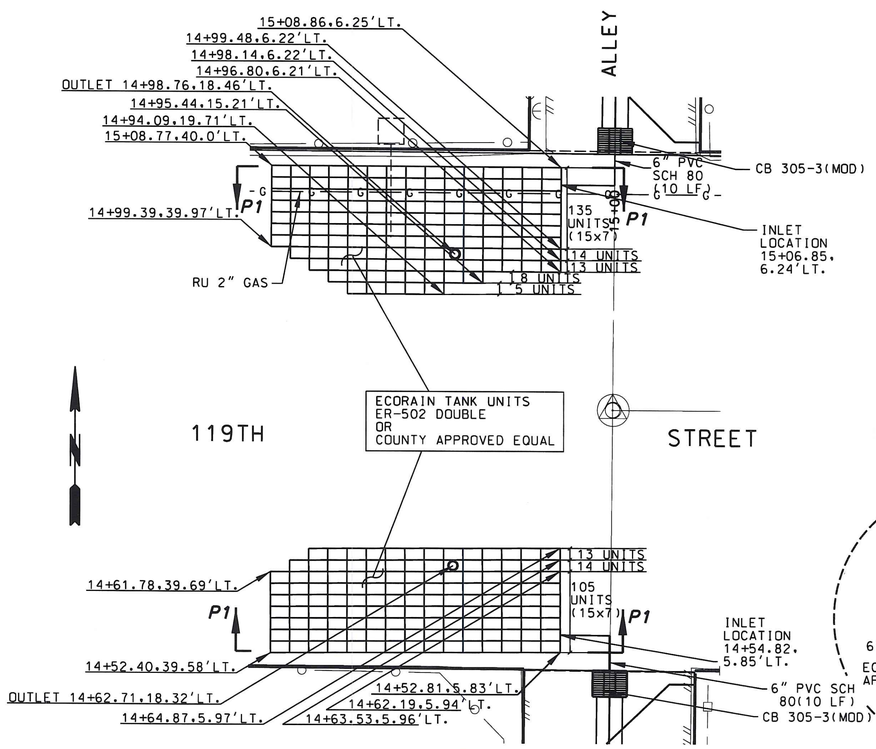

PLAN VIEW LAYOUT
STORMWATER STORAGE MODULE SYSTEM

NO SCALE

NOT TO BE MAINTAINED BY LACFCD

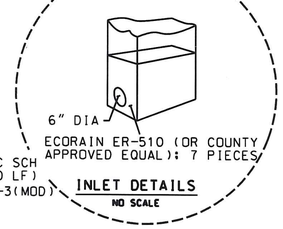

INLET DETAILS

NO SCALE

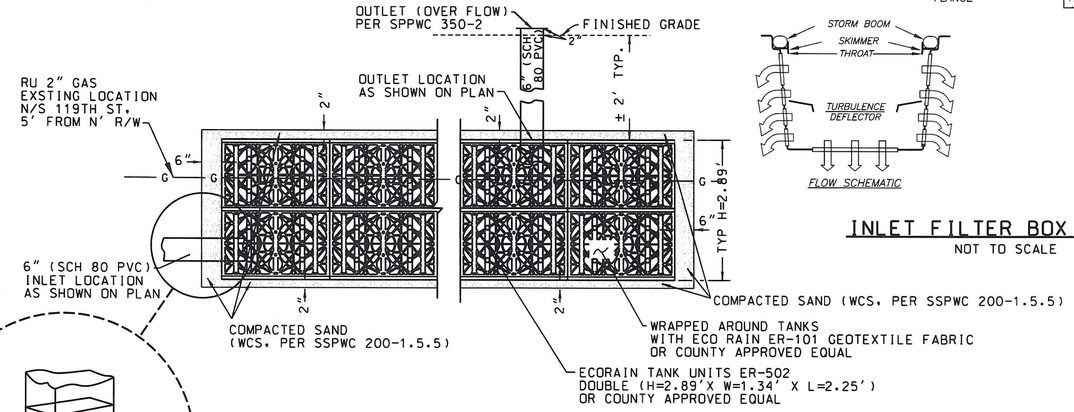

STORM WATER STORAGE SYSTEM
SECTION P1-P1

NO SCALE

PH084951

PLAN RD

DATE	MK	DESCRIPTION

REVISIONS

REGISTERED PROFESSIONAL ENGINEER F. CRUZ C59441 CIVIL STATE OF CALIFORNIA

PROJECT ENGINEER — DATE 11/19/15

COUNTY OF LOS ANGELES DEPARTMENT OF PUBLIC WORKS

WILLOWBROOK GREEN ALLEY

STORM WATER STORAGE SYSTEM

PROJECT ID NO. RDC0016071

PCA X920001043 | DWG | SHEET 6 OF 8

DRAFTER W.L. | DESIGNER W.L. | CHECKER F. CRUZ | CADD PROJECT FILE NAME RDC0016071.DGN | REVIEWED BY | DATE

DATE: $DATE$ TIME: $TIME$ FILE: $FILE$