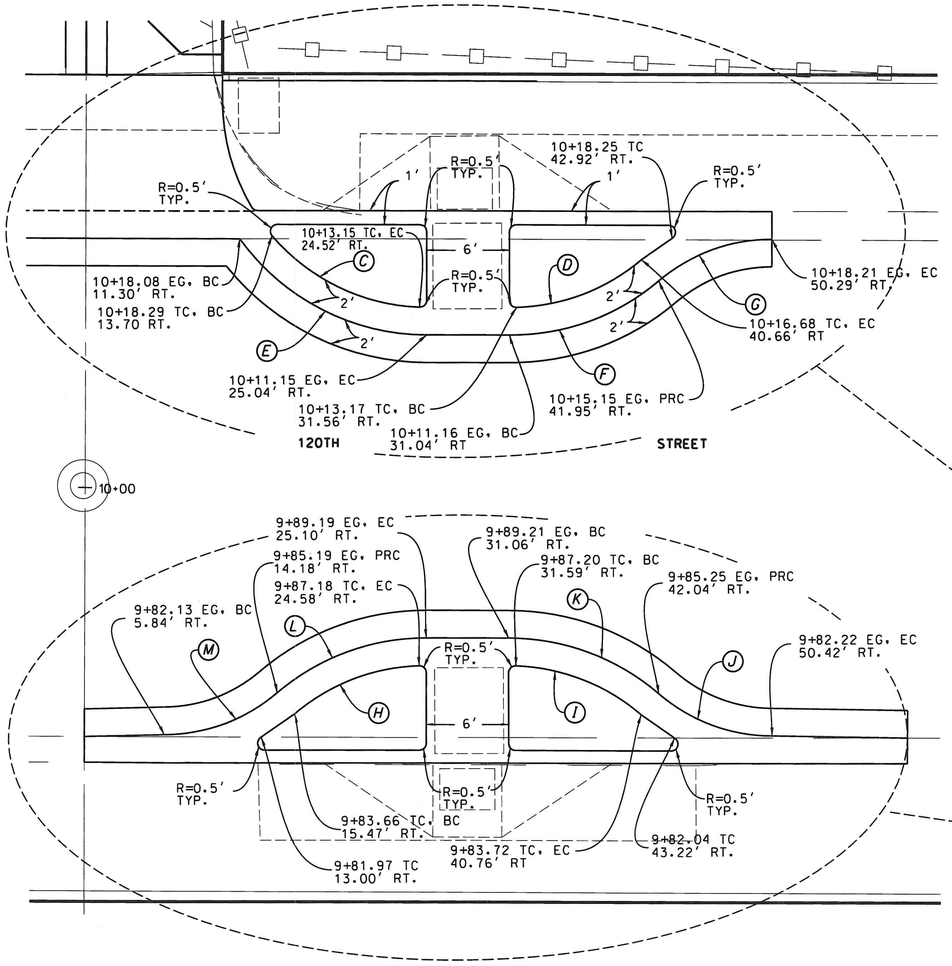

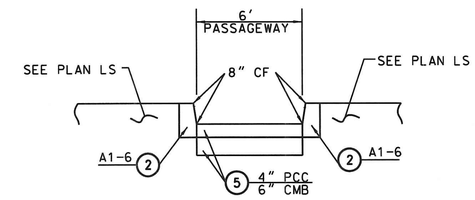

SECTION N-N

NOT TO SCALE

CURVE DATA				
	R	Δ	L	T
A	10'	89°54'35"	15.69'	9.98'
B	15'	31°08'27"	8.15'	4.18'
C	15'	47°05'29"	12.33'	6.54'
D	15'	37°58'06"	9.94'	5.16'
E	17'	53°49'42"	15.97'	8.63'
F	17'	39°56'40"	11.85'	6.18'
G	13'	39°56'40"	9.06'	4.72'
H	15'	38°01'38"	9.96'	5.17'
I	15'	38°10'48"	10.00'	5.19'
J	13'	40°05'32"	9.10'	4.74'
K	17'	40°09'22"	11.91'	6.21'
L	17'	40°00'11"	11.87'	6.19'
M	13'	39°56'40"	9.06'	4.72'

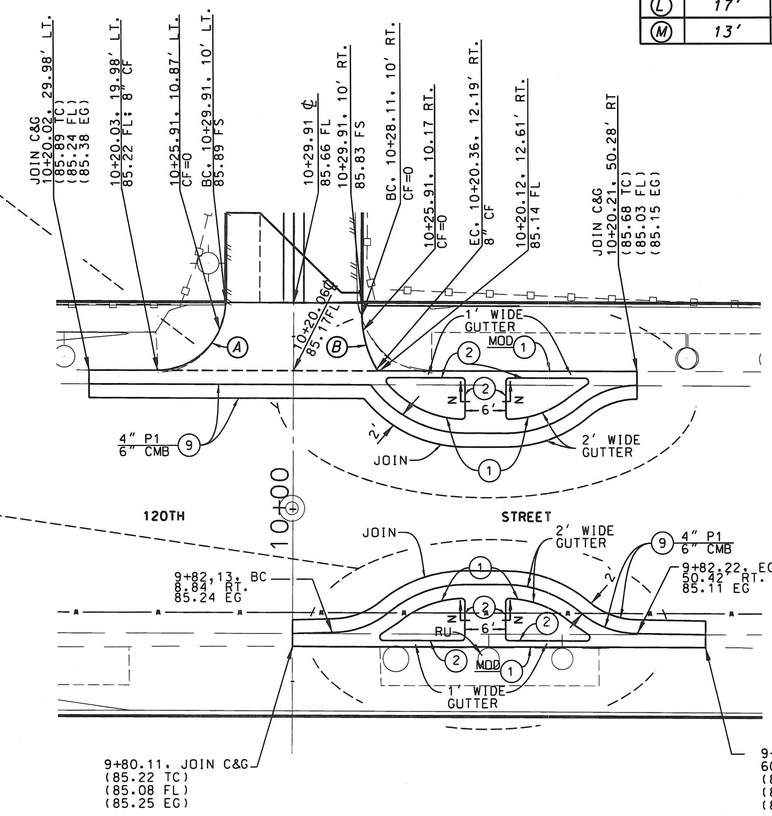

NOT TO SCALE

NOT TO SCALE

PH084953

PLAN RD

DATE	MK	DESCRIPTION

REVISIONS

REGISTERED PROFESSIONAL ENGINEER F. CRUZ C59441 CIVIL STATE OF CALIFORNIA

PROJECT ENGINEER 12/17/18 DATE

COUNTY OF LOS ANGELES DEPARTMENT OF PUBLIC WORKS

WILLOWBROOK GREEN ALLEY

E 120TH STREET TO E 118TH STREET

PROJECT ID NO. RDC0016071

PCA X920001043 | DWG | SHEET 8 OF 8

DRAFTER W.L. | DESIGNER W.L. | CHECKER F. CRUZ | CADD PROJECT FILE NAME RDC0016071.DGN | REVIEWED BY | DATE

DATE. $DATE$ TIME. $TIME$ FILE. $FILEL$