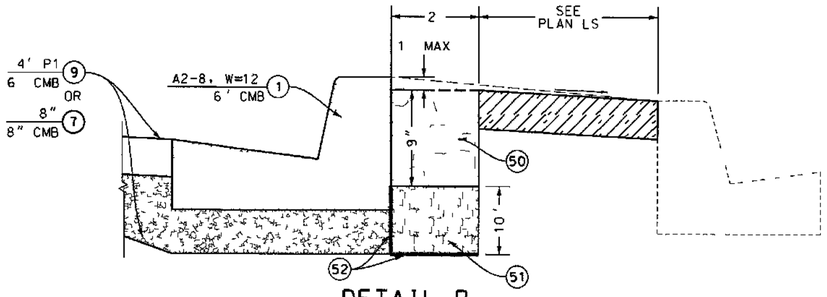

DETAIL B

TYPICAL SECTION ADJACENT TO LID
NO SCALE

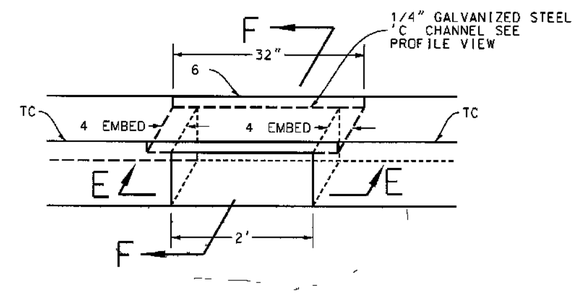

DETAIL E

NO SCALE

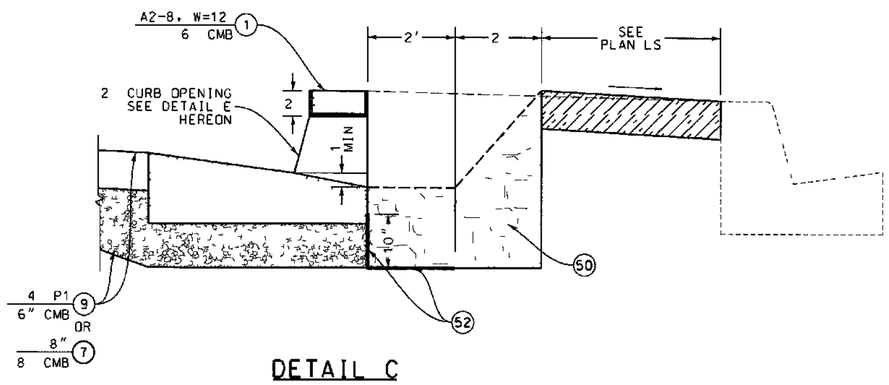

DETAIL C

TYPICAL SECTION AT CURB OPENING
STA 10+79 & 11+76
NO SCALE

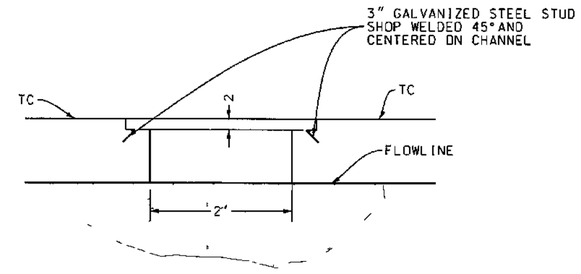

SECTION E-E

NO SCALE

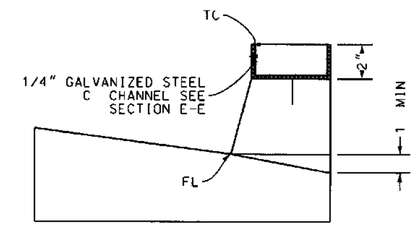

SECTION F-F

NO SCALE

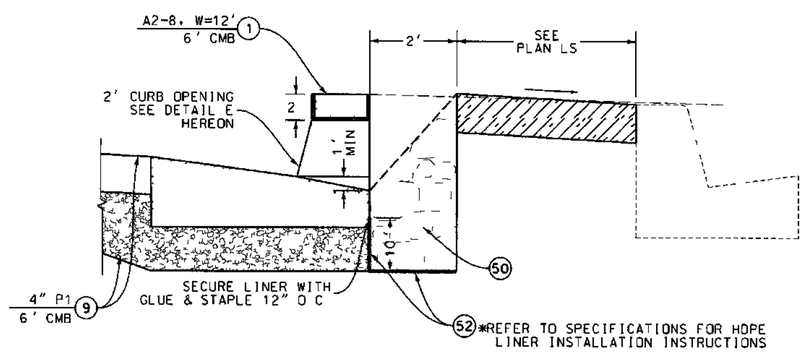

DETAIL D

TYPICAL SECTION AT CURB OPENING
STA 11+26
NO SCALE

PH085033

PLAN RD

COUNTY OF LOS ANGELES DEPARTMENT OF PUBLIC WORKS

MAIN ST. AVALON BL. AND ROSECRANS AV
LANDSCAPE IMPROVEMENTS
DETAILS
PROJECT ID NO RDC0016017

DATE	MK	DESCRIPTION

REVISIONS

REGISTERED PROFESSIONAL ENGINEER CHRISTOPHER HUDSON No. 77019 CIVIL STATE OF CALIFORNIA

PROJECT ENGINEER — DATE 6/9/16

PCA X920000977 | DWG PH085033 | SHEET 4 OF 8

DRAFTER C. HUDSON | DESIGNER C. HUDSON | CHECKER V. LLANA | CADD PROJECT FILE NAME | REVIEWED BY — DATE 6/9/16

PROPOSED FOR CONSTRUCTION — DATE | ADVERTISED — DATE | AS BUILT — DATE