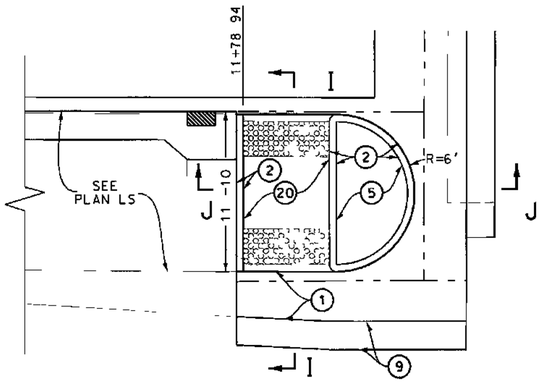

DETAIL F
NO SCALE

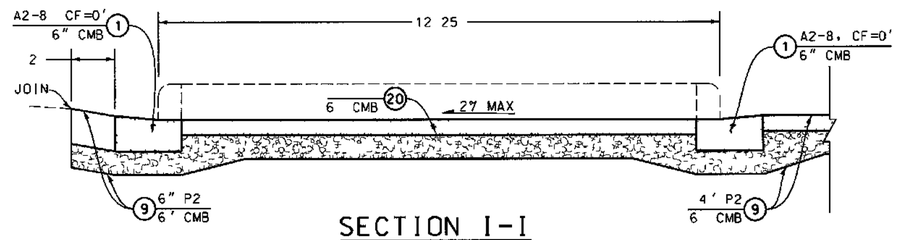

SECTION I-I
NO SCALE

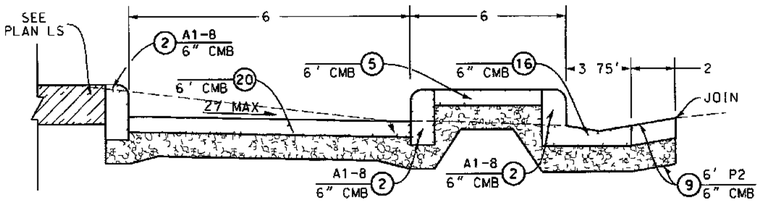

SECTION J-J
NO SCALE

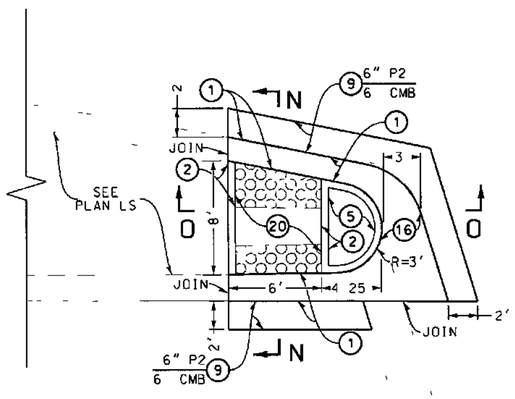

DETAIL I
NO SCALE

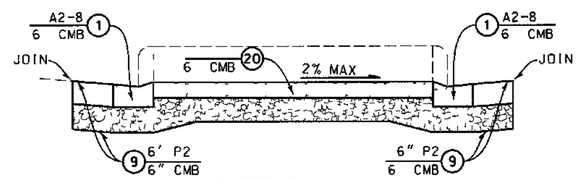

SECTION N-N
NO SCALE

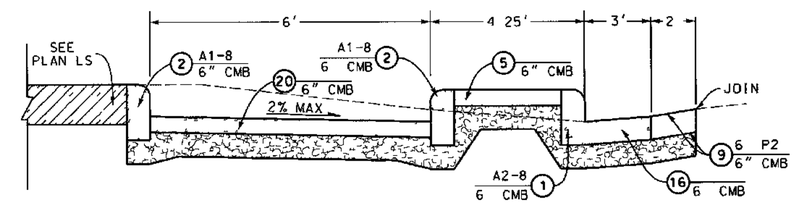

SECTION O-O
NO SCALE

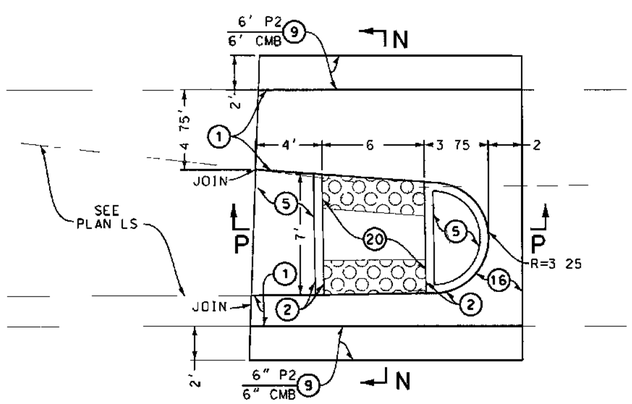

DETAIL J
NO SCALE

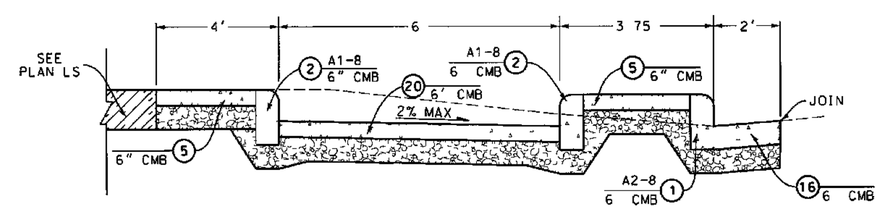

SECTION P-P
NO SCALE

PH085034

PLAN RD

DATE	MK	DESCRIPTION

REVISIONS

REGISTERED PROFESSIONAL ENGINEER CHRISTOPHER HUDSON No 77019 CIVIL STATE OF CALIFORNIA

PROJECT ENGINEER 6/9/16 DATE

COUNTY OF LOS ANGELES DEPARTMENT OF PUBLIC WORKS

MAIN ST. AVALON BL. AND ROSECRANS AV
LANDSCAPE IMPROVEMENTS

DETAILS

PROJECT ID NO. RDC0016017

PCA X920000977 | DWG PH085034 | SHEET 5 OF 8

DRAFTER C HUDSON | DESIGNER C HUDSON | CHECKER V LLANA | CADD PROJECT FILE NAME RDC0016017-DESIGN DGN | REVIEWED BY [signature] DATE 6/9/16

PROPOSED FOR CONSTRUCTION — DATE — ADVERTISED — DATE — AS BUILT — DATE